DITCH INTERIM ACTION DESIGN
DITCH A

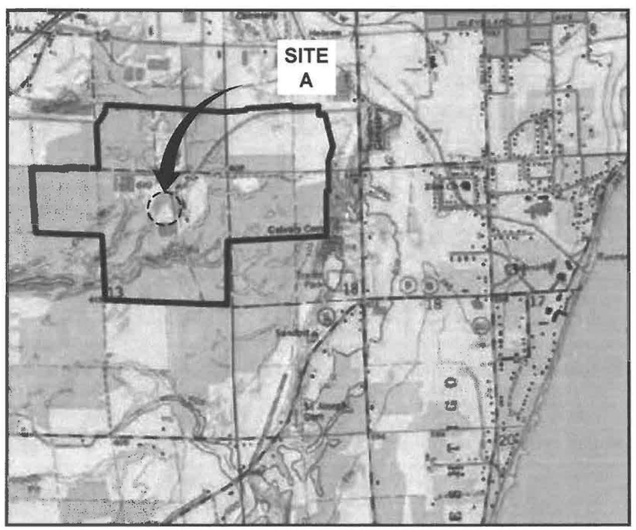

DATE ISSUED
OCTOBER 30, 2018

ANSUL FTC SITE
MARINETTE, WISCONSIN

INDEX TO DRAWINGS

G1	TITLE AND INDEX
G2	ABBREVIATIONS AND GENERAL NOTES
G3	SPECIFICATIONS (SHEET 1 OF 5)
G4	SPECIFICATIONS (SHEET 2 OF 5)
G5	SPECIFICATIONS (SHEET 3 OF 5)
G6	SPECIFICATIONS (SHEET 4 OF 5)
G7	SPECIFICATIONS (SHEET 5 OF 5)
C1	OVERALL SITE PLAN
C2	DITCH A SITE PLAN
C3	CIVIL DETAILS
C4	CIVIL DETAILS
C5	CHECK DAM DETAILS
M1	GENERAL LAYOUT
P1	PIPING AND INSTRUMENTATION DIAGRAM
E1	ELECTRICAL SINGLE LINE DIAGRAM

LOCATION MAP

0 2000' 4000'
GRAPHIC SCALE

ARCADIS Design & Consultancy for natural and built assets

ARCADIS U.S., INC.

WISCONSIN BENJAMIN J. VERBURG 31794 MAUWATOSA WI PROFESSIONAL ENGINEER

ARCADIS

LEGAL ENTITY:
ARCADIS U.S., Inc.
ARCHITECTURAL AND
ENGINEERING SERVICES, INC.

COPYRIGHT: 2015

CONSULTANTS

NO.	DATE	ISSUED FOR	BY
0	10/30/18	DRAFT DESIGN PACKAGE FOR REVIEW	EE

DATE:	10/30/18
PROJECT NO.:	WI001605.0001
FILE NAME:	DRAFT-1_G1_BID DOCS TITLE AND INDEX
DESIGNED BY:	BV
DRAWN BY:	EE
CHECKED BY:	MA

2700 INDUSTRIAL PARKWAY SOUTH
MARINETTE, WISCONSIN 54143
215-362-0700
ANSUL FTC SITE
DITCH INTERIM ACTION DESIGN

ARCADIS PROJ. NO. WI001605.0001

SHEET TITLE
TITLE AND INDEX

SCALE:
G1

SHEET ___ OF 1

User:EBERT Spec:AUS-NCSMOD File:G:\APROJECTS\TYCO\WI001605\CADD\DITCH INTERIM ACTION\DITCH A ONLY PACKAGE\DRAFT-1_G1_BID DOCS TITLE AND INDEX.DWG Scale:1:1/2 SavedDate:10/29/2018 Time:17:20 Plot Date: Ebert, Liz; 10/30/2018; 09:39 ; Layout:G1

VALVE SYMBOLS

- GATE VALVE
- BALL VALVE
- CHECK VALVE
- RELIEF VALVE
- REDUCER
- SAMPLE PORT
- FLANGED CONNECTION

EQUIPMENT SYMBOLS

- GRANULAR ACTIVATED CARBON (GAC) VESSEL
- TANK
- BAG FILTER
- ELECTRIC MOTOR
- SUMP PUMP
- CENTRIFUGAL PUMP

INSTRUMENTATION SYMBOLS

- FIT # — INSTRUMENT FIELD MOUNTED
- FIR # — INSTRUMENT PANEL FACE MOUNTED
- DPAHH 300 — PANEL MOUNTED DISPLAY ALARM

INSTRUMENT IDENTIFICATION LEGEND

	FIRST LETTER		SUCCEEDING LETTERS		
	MEASURED OR INITIATING VARIABLE,	MODIFIER	READOUT OR PASSIVE FUNCTION	OUTPUT FUNCTION	MODIFIER
A	ANALYSIS		ALARM		
B	BURNER FLAME		NOT USED	NOT USED	NOT USED
C	CONDUCTIVITY (ELECTRICAL)			CONTROL	CLOSED
D	DENSITY (MASS) OR SPECIFIC GRAVITY	DIFFERENTIAL			
E	VOLTAGE (EMF)		PRIMARY ELEMENT		
F	FLOW RATE	RATIO (FRACTION)			
G	INTRUSION		GLASS GAGE (UNCALIBRATED)		
H	HAND (MANUALLY INITIATED)				HIGH
I	CURRENT (ELECTRICAL)		INDICATE		
J	POWER	SCAN			
K	TIME OR TIME SCHEDULE			CONTROL STATION	
L	LEVEL		LIGHT (PILOT)		LOW
M	MOISTURE OR HUMIDITY				MIDDLE OR INTER-MEDIATE
N	SEQUENCE, STRATEGY		NOT USED	NOT USED	NOT USED
O	NOT USED		ORIFICE (RESTRICTION)		OPEN
P	PRESSURE OR VACUUM		POINT (TEST CONNECTION)	PULSE	
Q	QUANTITY	INTEGRATE OR TOTALIZE			
R	RADIOACTIVITY		RECORD OR PRINT		
S	SPEED, FREQUENCY	SAFETY		SWITCH	
T	TEMPERATURE			TRANSMIT	
U	MULTIVARIABLE		MULTIFUNCTION	MULTIFUNCTION	MULTIFUNCTION
V	VIBRATION			VALVE, DAMPER OR LOUVER	
W	WEIGHT OR FORCE		WELL		
X	UNCLASSIFIED	X AXIS	UNCLASSIFIED	UNCLASSIFIED	UNCLASSIFIED
Y	EVENT STATUS	Y AXIS		RELAY OR COMPUTE	
Z	POSITION			DRIVE, ACTUATE OR UNCLASSIFIED FINAL CONTROL ELEMENT	

CODES/STANDARDS:

AI	ASPHALT INSTITUTE
AASHTO	AMERICAN ASSOCIATION OF STATE HIGHWAY AND TRANSPORTATION OFFICIALS
ACI	AMERICAN CONCRETE INSTITUTE
ANSI	AMERICAN NATIONAL STANDARDS INSTITUTE
ASCE	AMERICAN SOCIETY OF CIVIL ENGINEERS
ASTM	AMERICAN SOCIETY FOR TESTING AND MATERIALS
AWS	AMERICAN WELDING SOCIETY
AWWA	AMERICAN WATER WORKS ASSOCIATION STANDARD
IEEE	INSTITUTE OF ELECTRICAL AND ELECTRONIC ENGINEERS
ISA	INTERNATIONAL SOCIETY OF AUTOMATION
NEC	NATIONAL ELECTRICAL CODE
NEMA	NATIONAL ELECTRICAL MANUFACTURERS ASSOCIATION
NESC	NATIONAL ELECTRICAL SAFETY CODE
NFPA	NATIONAL FIRE PROTECTION ASSOCIATION
OSHA	OCCUPATIONAL SAFETY AND HEALTH ADMINISTRATION
UL	UNDERWRITERS LABORATORY

ABBREVIATIONS

&	AND
@	AT
1PH	SINGLE-PHASE
1P	SINGLE-POLE
2/C	TWO-CONDUCTOR
3/C	THREE-CONDUCTOR
3PH	THREE-PHASE
3PLY	THREE-PLY
3W	THREE-WIRE
4/C	FOUR-CONDUCTOR
4OUT	QUADRUPLE RECEPTACLE OUTLET
4PDT	FOUR-POLE DOUBLE THROW
4PST	FOUR-POLE SINGLE THROW
4W	FOUR-WIRE
CS	CARBON STEEL
CPVC	CHLORINATED POLYVINYLCHLORIDE
DGR	DIRECTED GROUNDWATER RECIRCULATION
EQ	EQUALIZATION
EX	EXTRACTION
GAC	GRANULAR ACTIVATED CARBON
GAL	GALLONS
GPD	GALLONS PER DAY
GPM	GALLONS PER MINUTE
HDPE	HIGH DENSITY POLYETHYLENE
HP	HORSE POWER
ID	INSIDE DIAMETER
INJ	INJECTION
IW	INJECTION WELL
MIN	MINIMUM
MAX	MAXIMUM
MCE	MODULAR CONTROL EQUIPMENT
MCP	MAIN CONTROL PANEL
MW	MONITORING WELL
NO	NUMBER
NPT	NATIONAL PIPE THREAD
NTS	NOT TO SCALE
OD	OUTSIDE DIAMETER
PB	PANEL BOARD
PVC	POLYVINYLCHLORIDE
SCH	SCHEDULE
SDR	SIZE DIAMETER RATIO
SST	STAINLESS STEEL
TYP	TYPICAL
VAC	VOLTS ALTERNATING CURRENT

NOTES:

1. CONTRACTOR SHALL CLEAR TREES AS NECESSARY AND CUT STUMPS FLUSH WITH GRADE.
2. ALL ELECTRICAL WORK SHALL MEET ALL FEDERAL AND LOCAL CODES.
3. CONTRACTOR SHALL TAKE PRECAUTIONS TO PROTECT ALL UTILITIES, STRUCTURES, AND EASEMENTS PRESENT ON AND AROUND THE SITE. ANY DAMAGE TO THESE UTILITIES DUE TO WORK PERFORMED SHALL BE THE SOLE RESPONSIBILITY OF THE CONTRACTOR AT NO ADDITIONAL COST TO THE OWNER.
4. CONTRACTOR SHALL RESTORE SITE TO THE EXISTING CONDITIONS UPON COMPLETION OF THE WORK.
5. CONTRACTOR SHALL SEED AND STRAW ONCE THE WORK IS COMPLETED IN ACCORDANCE WITH THE WDNR STORM WATER BEST PRACTICES.
6. IT IS SOLELY THE CONTRACTOR'S RESPONSIBILITY TO DETERMINE THE PROCEDURES AND SEQUENCE TO ENSURE THE SAFETY OF THE WORK AND PERSONNEL DURING CONSTRUCTION.
7. CONTRACTOR SHALL BE RESPONSIBLE FOR COORDINATION WITH THE UTILITIES FOR RECOMMENDED RELOCATION, PROTECTION, AND CONTROLS.
8. CONTRACTOR SHALL MAINTAIN BENDING RADII GREATER THAN THE DEFLECTION ANGLES LESS THAN THE HDPE MANUFACTURERS RECOMMENDATIONS FOR INSTALLATION OF HORIZONTAL OR VERTICAL CURVES.
9. SIGNS, MARKERS, AND FLAGS SHALL BE INSTALLED BY THE CONTRACTOR FOR ALL UNDERGROUND UTILITIES.
10. UTILITY LOCATION WORK SHALL BE PERFORMED BY THE CONTRACTOR.
11. MAINTAIN THE SITE DRAINAGE SUCH THAT ALL SURFACE WATER WITHIN EARTH DISTURBING LIMITS IS DIVERTED THROUGH EROSION AND SEDIMENT CONTROL MEASURES.

User:EEBERT Spec:AUS-NCSMOD File:G:\#PROJECT\TYCO\M001605\CADD\DITCH INTERIM ACTION\DITCH A ONLY PACKAGE\DRAFT-2_G2 ABBREVIATIONS.DWG Scale:1:1 SavedDate:10/24/2018 Time:08:55 Plot Date: Ebert, Liz; 10/30/2018; 09:41 ; Layout:G2

ARCADIS
LEGAL ENTITY:
ARCADIS U.S., Inc.
ARCHITECTURAL AND
ENGINEERING SERVICES, INC.

COPYRIGHT: 2015

CONSULTANTS

NO.	DATE	ISSUED FOR	BY
0	10/30/18	DRAFT DESIGN PACKAGE FOR REVIEW	EE

SEALS

DATE:	10/30/18
PROJECT NO.:	WI001605.0001
FILE NAME:	DRAFT-2_G2 ABBREVIATIONS
DESIGNED BY:	BV
DRAWN BY:	EE
CHECKED BY:	MA

2700 INDUSTRIAL PARKWAY SOUTH
MARINETTE, WISCONSIN 54143
215-362-0700
ANSUL FTC SITE

DITCH INTERIM ACTION DESIGN

ARCADIS PROJ. NO. WI001605.0001

SHEET TITLE

ABBREVIATIONS AND GENERAL NOTES

SCALE:

G2

SHEET ___ OF 1

EARTHWORK

PART 1 - GENERAL

1.1 DESCRIPTION

A. SCOPE:
1. GENERAL EARTHWORK.
2. SITE PREPARATION
3. INSTALLATION OF CONSTRUCTION SAFETY FENCING,
4. EXCAVATION
5. DEWATERING
6. STOCKPILING
7. SUBGRADE PREPARATION
8. FILL PLACEMENT.
9. TEMPORARY SHEETING, SHORING AND BRACING

B. RELATED DOCUMENTS:
1. DRAWINGS.
2. SYSTEM REQUIREMENTS DOCUMENT.

C. COORDINATION:
1. COORDINATION OF SURVEY REQUIREMENTS AS SPECIFIED IN THE SURVEYING NOTES.
2. COORDINATION OF EARTHWORK ACTIVITIES WITH CONTRACTOR'S EROSION AND SEDIMENT CONTROL (ESC) PLAN SPECIFIED IN THE SURFACE WATER MANAGEMENT AND EROSION CONTROL NOTES, SURFACE WATER MANAGEMENT AND EROSION CONTROL AND AS SHOWN ON THE DRAWINGS.

1.2 REFERENCES

A. CONTRACTOR SHALL USE THE MOST RECENT VERSION OF STANDARDS AND CODES, UNLESS NOTED OTHERWISE.

B. OCCUPATIONAL SAFETY AND HEALTH ADMINISTRATION (OSHA).

C. MASTER SPECIFICATIONS, WISCONSIN DEPARTMENT OF ADMINISTRATION (DOA)

D. AMERICAN SOCIETY FOR TESTING AND MATERIALS (ASTM).
1. ASTM D698 -STANDARD TEST METHODS FOR LABORATORY COMPACTION CHARACTERISTICS OF SOIL USING STANDARD EFFORT (12 400 FT-LBF/FT3 (600 KN-M/M3))
2. ASTM D2487 - STANDARD PRACTICE FOR CLASSIFICATION OF SOILS FOR ENGINEERING PURPOSES (UNIFIED SOIL CLASSIFICATION SYSTEM)
3. ASTM D4318 - STANDARD TEST METHODS FOR LIQUID LIMIT, PLASTIC LIMIT, AND PLASTICITY INDEX OF SOILS
4. ASTM D4523 STANDARD TEST METHODS FOR MAXIMUM INDEX DENSITY AND UNIT WEIGHT OF SOILS USING A VIBRATORY TABLE
5. ASTM D6913 - STANDARD TEST METHODS FOR PARTICLE-SIZE DISTRIBUTION (GRADATION) OF SOILS USING SIEVE ANALYSIS
6. ASTM D6938 - STANDARD TEST METHODS FOR IN-PLACE DENSITY AND WATER CONTENT OF SOIL AND SOIL-AGGREGATE BY NUCLEAR METHODS (SHALLOW DEPTH)
7. ASTM D7928 - STANDARD TEST METHOD FOR PARTICLE-SIZE DISTRIBUTION (GRADATION) OF FINE-GRAINED SOILS USING THE SEDIMENTATION (HYDROMETER) ANALYSIS
8. ASTM D7928 - STANDARD TEST METHOD FOR PARTICLE-SIZE DISTRIBUTION (GRADATION) OF FINE-GRAINED SOILS USING THE SEDIMENTATION (HYDROMETER) ANALYSIS

E. RAINWATER AND LAND DEVELOPMENT, WISCONSIN POLLUTANT DISCHARGE ELIMINATION SYSTEM (WPDES) STORM WATER DISCHARGE PERMIT PROGRAM UNDER AUTHORITY OF CH. NR 216, WISCONSIN ADMINISTRATIVE CODE.

1.3 SUBMITTALS

A. ACTION SUBMITTALS: SUBMIT THE FOLLOWING:
1. SCHEDULE FOR ACTIVITIES INCLUDED IN EACH SCOPE OF WORK, WITH EQUIPMENT AND RESOURCES IDENTIFIED.
2. LAYOUT OF CONSTRUCTION SITE ACCESS AND TEMPORARY ACCESS ROADS AND HAUL ROADS, CONSTRUCTION SAFETY FENCE, CHAIN-LINK FENCE AND GATES, RADIOLOGICAL CONTROL FENCE, AND TEMPORARY PIPES, IF REQUIRED.
3. PRODUCT DATA:
a. SUBMIT GRADATION ANALYSES AND A PROCTOR TEST REPORTS FOR STRUCTURAL FILL MATERIALS.

B. INFORMATIONAL SUBMITTALS: SUBMIT THE FOLLOWING:
1. VERIFICATION, ACKNOWLEDGEMENT, AND ACCEPTANCE OF THE EXISTING CONDITIONS AND MATERIAL STOCKPILES.
2. EXCAVATION AND DEWATERING MEANS, METHODS, AND TECHNIQUES.
3. STOCKPILE MANAGEMENT PLAN, INCLUDING SURFACE WATER MANAGEMENT AND EROSION AND SEDIMENT CONTROL, STOCKPILING BY TYPE OF MATERIAL, STOCKPILE MAINTENANCE, STOCKPILE REMOVAL AND RELOCATION, AND SITE GRADING AND STABILIZATION.
4. INTENDED USE OF CONSTRUCTION LAYDOWN AREA(S) AND ADDITIONAL CONSTRUCTION LAYDOWN AREAS NOT IDENTIFIED ON THE DRAWINGS.
5. MEANS, METHODS, AND TECHNIQUES FOR MATERIAL HANDLING, INCLUDING REMOVAL OF UNSUITABLE SUBGRADE AND VISIBLE ROCK PARTICLES LARGER THAN SPECIFIED, AND FOR FILL, SHALE AND ROCK FILL SPECIFIED IN THIS SECTION.
6. MEANS, METHODS, AND TECHNIQUES FOR INSTALLATION AND REMOVAL OF EXCAVATION AND TRENCH SUPPORTS.
7. MEANS, METHODS, AND TECHNIQUES FOR DUST CONTROL.
8. PLAN AND MEASURES FOR HOT WEATHER WORK AND COLD WEATHER WORK ACTIVITIES AT TEMPERATURES BELOW 32 DEGREES FAHRENHEIT (°F).

1.4 PRODUCT DELIVERY, STORAGE, AND HANDLING

A. PACKING, SHIPPING, HANDLING AND UNLOADING:
1. DELIVER MATERIALS TO THE SITE TO ENSURE UNINTERRUPTED PROGRESS OF THE WORK.

B. STORAGE AND PROTECTION:
1. STORE MATERIALS TO PERMIT EASY ACCESS FOR INSPECTION AND IDENTIFICATION.

C. ACCEPTANCE AT SITE:
1. ALL BOXES, CRATES AND PACKAGES SHALL BE INSPECTED BY CONTRACTOR UPON DELIVERY TO THE SITE.

PART 2 - PRODUCTS

2.1 MATERIALS

A. GENERAL FILL:
1. CL, CL-ML, CH, OR CH-MH MATERIAL IN ACCORDANCE WITH UNIFIED SOIL CLASSIFICATION SYSTEM (USCS).

B. OBTAIN FILL MATERIALS FROM EXCAVATION AND TRENCHING INCLUDED IN THIS CONTRACT. ADDITIONAL MATERIAL, IF REQUIRED, SHALL BE OBTAINED FROM THE ON-SITE STOCKPILES OR ON-SITE BORROW AREAS IDENTIFIED BY THE ENGINEER.

C. FILL MATERIALS OBTAINED ON-SITE MAY INCLUDE NATIVE MATERIAL. THE GENERAL LOCATION AND DEPTH OF EACH TYPE OF MATERIAL IN THE EXCAVATION AND TRENCHING AREAS ARE SHOWN ON THE DRAWINGS, BASED ON THE REFERENCE THESE DOCUMENTS AND DETERMINE LOCATION, LIMITS, AND DEPTH OF EACH TYPE OF MATERIAL AVAILABLE QUANTITY OF FILL MATERIALS, AND DETERMINE THE CHARACTERISTICS OF THE SUBSURFACE SOIL CONDITIONS TO BE ENCOUNTERED.

D. FILL AND BACKFILL MATERIALS SHALL BE FREE OF DEBRIS, FOREIGN OBJECTS, LARGE ROCK FRAGMENTS, ORGANICS, AND DELETERIOUS MATERIALS. VISIBLE ROCK PARTICLES SHALL BE A MAXIMUM DIMENSION OF HALF THE LOOSE LIFT THICKNESS. MATERIAL FOR FILL SHALL CONFORM TO THE REQUIREMENTS LISTED IN THIS SECTION. MATERIALS WITH OTHER USCS CLASSIFICATIONS MAY BE USED UPON APPROVAL OF THE ENGINEER.

E. RESIDUUM AND WEATHERED SHALE MATERIALS OBTAINED FROM ON-SITE EXCAVATIONS SHALL BE CONSIDERED NONDURABLE AND MAY BE PLACED AS FILL OR BACKFILL AS SPECIFIED IN THIS SECTION AND THE TRENCH EXCAVATION AND BACKFILL NOTES.

F. OBTAIN WATER FOR MOISTURE CONDITIONING FILL AND FOR DUST CONTROL FROM THE ON SITE WATER FILLING STATIONS SHOWN ON THE DRAWINGS.

G. FURNISH ORANGE HDPE CONSTRUCTION SAFETY FENCE, 4 FEET IN HEIGHT, OPENING SIZE APPROXIMATELY 4 INCHES X 1 INCH, MINIMUM TENSILE STRENGTH OF 300 POUNDS PER FOOT OF WIDTH; OR FENCE OF GALVANIZED STEEL WELDED WIRE FABRIC AS SPECIFIED IN THIS SECTION AND/OR SHOWN ON THE DRAWINGS. POSTS SHALL BE T-SHAPED (T-POST), 1½ INCH X 1½ INCH, MINIMUM 3/16 INCH THICK X 5 FEET LONG, AND MADE OF STEEL, OR AS OTHERWISE AUTHORIZED BY THE COMPANY. PROTECTIVE CAPS SHALL BE PLACED ON THE TOPS OF ALL T POSTS. TO DELINEATE RADIOLOGICAL CONTROL AREAS, INSTALL POSTS, SIGNAGE, AND PROVIDE AND INSTALL YELLOW/MAGENTA ROPE.

H. FURNISH SIGNS FOR CONSTRUCTION SAFETY FENCE IN ACCORDANCE WITH THE CONTRACT DOCUMENTS.

I. SIGNS FOR RADIOLOGICAL CONTROL FENCE WILL BE PROVIDED BY THE COMPANY AS SPECIFIED IN THE CONTRACT DOCUMENTS.

2.2 TEMPORARY SHEETING, SHORING AND BRACING

A. THE TYPE OF SHEETING USED, DESIGN, AND METHOD OF INSTALLATION, INCLUDING EMBEDMENT AND BRACING, SHALL BE DETERMINED BY CONTRACTOR AS REQUIRED BY THE CONTRACT DOCUMENTS.

2.3 EQUIPMENT

A. FURNISH EQUIPMENT TO PERFORM EARTHWORK IN ACCORDANCE WITH THIS SECTION.

B. FURNISH HAND COMPACTION EQUIPMENT, SUCH AS WALK-BEHIND PAD-FOOT COMPACTORS, HAND TAMPERS, OR VIBRATORY PLATE COMPACTORS, FOR COMPACTION IN AREAS INACCESSIBLE TO LARGE COMPACTION EQUIPMENT.

C. FURNISH WATER TANK TRUCKS OR WATER WAGONS, WATER STORAGE TANKS, PRESSURE DISTRIBUTORS, OR OTHER EQUIPMENT DESIGNED TO APPLY WATER UNIFORMLY AND IN CONTROLLED QUANTITIES AT VARIABLE SURFACE WIDTHS IN ORDER TO PROVIDE THE REQUIRED IN-PLACE MOISTURE CONTENT AND TO PREVENT DRYING OF SOIL SURFACES IN ACCORDANCE WITH THE CONTRACT DOCUMENTS.

PART 3 - EXECUTION

3.1 EXISTING CONDITIONS

A. VERIFY EXISTING GRADES IN ACCORDANCE WITH THE SURVEYING NOTES.

B. PRIOR TO PERFORMING WORK DESCRIBED IN THIS SECTION, INSTALL AND MAINTAIN SURFACE WATER MANAGEMENT AND EROSION AND SEDIMENT CONTROLS IN ACCORDANCE WITH THE SURFACE WATER MANAGEMENT AND EROSION CONTROL NOTES.

C. PERFORM CONSTRUCTION ACTIVITIES IN SUCH A MANNER THAT EQUIPMENT OPERATING IN RADIOLOGICAL CONTROL AREAS DOES NOT OPERATE OUTSIDE OF RADIOLOGICAL CONTROL AREAS. EQUIPMENT OPERATING IN RADIOLOGICAL CONTROL AREAS SHALL BE DECONTAMINATED BY THE CONTRACTOR, RADIOLOGICALLY SURVEYED, AND RELEASED BY THE COMPANY PRIOR TO EXITING RADIOLOGICAL CONTROL AREAS FOR USE IN OTHER AREAS.

D. IF A VERTEBRATE PALEONTOLOGICAL OR ARCHAEOLOGICAL ARTIFACT DISCOVERY IS MADE DURING EXCAVATION, STOP WORK IN THE AREA OF DISCOVERY AND NOTIFY THE COMPANY. WORK IN THE AREA OF DISCOVERY SHALL NOT RESUME UNTIL AUTHORIZED BY THE COMPANY.

E. MANAGE MATERIAL STOCKPILES AS SPECIFIED IN THIS SECTION.

F. IMPLEMENT DUST CONTROL.

3.2 SITE PREPARATION

A. INSTALL CONSTRUCTION SAFETY FENCE, RADIOLOGICAL CONTROL FENCE, AND ASSOCIATED SIGNS AT CONSTRUCTION LIMITS AND LIMITS OF THE RADIOLOGICAL CONTROL AREAS IN ACCORDANCE WITH THE CONTRACT DOCUMENTS. RELOCATE CONSTRUCTION SAFETY FENCE AND RADIOLOGICAL CONTROL FENCE AS REQUIRED TO SUPPORT CONSTRUCTION ACTIVITIES. INSTALL SIGNS AND BARRICADES AROUND TRENCHES, AND EXCAVATED AREAS IN ACCORDANCE WITH THE CONTRACT DOCUMENTS.

B. MAINTAIN AND REPAIR CONSTRUCTION SAFETY FENCE, RADIOLOGICAL CONTROL FENCE, AND CHAIN-LINK FENCE AND GATES FOR THE DURATION OF THE CONTRACT WORK. MAINTAIN FENCING TO MINIMIZE VERTICAL SAGGING.

C. PRIOR TO EARTHWORK ACTIVITIES, PERFORM CLEARING, GRUBBING, AND STRIPPING AS NECESSARY.

D. CONSTRUCT THE ACCESS CORRIDORS, PARKING, AND OTHER VEHICLE TRAVEL AREAS IN ACCORDANCE WITH THE DRAWINGS AND THE AGGREGATE BASE NOTES. MAINTAIN AND REPAIR THESE AREAS FOR THE DURATION OF THE CONTRACT.

E. FOR EXCAVATIONS WITHIN 3 FEET OF EXISTING SUBSURFACE STRUCTURES OR UTILITIES, HAND-EXCAVATE WHERE NECESSARY AND USE SHORING OR OTHER MEANS, METHODS, AND TECHNIQUES. PROTECT STRUCTURES AND UTILITIES DURING EARTHWORK ACTIVITIES AS SHOWN ON THE DRAWINGS AND AS APPROVED BY THE ENGINEER.

3.3 EXCAVATION

A. DO NOT REMOVE SOIL FROM THE SITE OR DISPOSE OF SOIL EXCEPT AS AUTHORIZED BY THE ENGINEER.

B. STABILIZE DISTURBED AREAS IN ACCORDANCE WITH TEMPORARY OR PERMANENT SEEDING AND APPLY MULCH WITHIN TIME FRAMES IDENTIFIED IN THE CONTRACT DOCUMENTS AND UNDER APPLICATION CONDITIONS AS DESCRIBED IN THE ODNR STANDARDS.

C. EXCAVATION FOR TRENCHES IS ADDRESSED IN THE TRENCH EXCAVATION AND BACKFILL NOTES.

3.4 EXCAVATION DEWATERING

A. MANAGE GROUNDWATER AND SURFACE WATER RUNOFF AND RUN-ON IN EXCAVATIONS AND TRENCHES IN ACCORDANCE WITH THE REQUIREMENTS OF THIS SECTION AND THE SURFACE WATER MANAGEMENT AND EROSION CONTROL NOTES.

B. COLLECT WATER THAT ACCUMULATES IN THE EXCAVATION OR TRENCH IN A TOE DRAIN OR OTHER SUITABLE SUMP, AND PUMP TO A LOCATION APPROVED BY THE ENGINEER.

C. VERIFY THAT COLLECTED WATER DOES NOT HAVE AN OIL SHEEN PRIOR TO PUMPING. IF SHEEN IS PRESENT, NOTIFY THE ENGINEER PRIOR TO PUMPING. IF THE ENGINEER DETERMINES THAT OIL IS PRESENT, COLLECT SHEEN WITH ADSORBENT CLOTH OR OTHER MEANS, METHODS, AND TECHNIQUES AS REQUIRED BY THE CONTRACT DOCUMENTS.

D. PREVENT SURFACE WATER RUN-ON FROM ADJACENT AREAS FROM ENTERING EXCAVATIONS AND TRENCHES BY INSTALLING TEMPORARY DIVERSION BERMS OR OTHER SURFACE WATER MANAGEMENT FEATURES IN ACCORDANCE WITH THE SURFACE WATER MANAGEMENT AND EROSION CONTROL NOTES.

3.5 STOCKPILING

A. STOCKPILE MATERIALS FROM CLEARING, GRUBBING, STRIPPING, EXCAVATION, AND TRENCHING ACTIVITIES IN SEPARATE STOCKPILES. DELETERIOUS MATERIALS AND UNSUITABLE SOIL FROM THE ABOVE MENTIONED ACTIVITIES SHALL ALSO BE PLACED IN SEPARATE STOCKPILES. STOCKPILE LOCATIONS SHALL BE AS SHOWN ON THE DRAWINGS OR AS DESIGNATED BY THE ENGINEER.

B. STOCKPILE OTHER MATERIALS INCLUDING TOPSOIL FROM OFF-SITE SOURCES AT ON-SITE LOCATIONS DESIGNATED BY THE ENGINEER. MAINTAIN MATERIAL STOCKPILES IN ACCORDANCE WITH THIS SECTION.

C. PLACE EXCAVATED SOIL IN STOCKPILES WITH STABLE SLOPES. GRADE STOCKPILES TO DRAIN, SEAL THEM BY TRACKING PERPENDICULAR TO THE SLOPE CONTOURS, AND MAINTAIN THEM ON A DAILY BASIS DURING PERIODS WHEN MATERIAL IS TAKEN FROM OR ADDED TO THE STOCKPILES.

D. ENCAPSULATE STOCKPILES WITH APPROVED CRUSTING AGENT OR STABILIZE STOCKPILES IN ACCORDANCE WITH TEMPORARY OR PERMANENT SEEDING AND APPLY MULCH WITHIN TIME FRAMES IDENTIFIED IN THE CONTRACT DOCUMENTS AND UNDER APPLICATION CONDITIONS AS DESCRIBED IN THE ODNR STANDARDS.

3.6 SUBGRADE

A. SUBGRADE SHALL BE FREE OF DEBRIS, FOREIGN OBJECTS, ORGANICS, AND OTHER DELETERIOUS MATERIALS.

B. SUBGRADE FOR ROADS AND CHANNELS IN FILL SECTIONS SHALL BE PLACED AND COMPACTED IN ACCORDANCE WITH THE REQUIREMENTS IN THIS SECTION FOR FILL.

C. IN EXCAVATIONS OR OTHER AREAS WHERE WATER ACCUMULATES, IMPLEMENT MEASURES TO REMOVE THE WATER IN ACCORDANCE WITH THIS SECTION. MAINTAIN THE SUBGRADE FREE OF STANDING WATER AND IN A FIRM CONDITION, WHICH CONFORMS TO THE REQUIREMENTS OF THIS SECTION. MAINTAIN DEWATERED AREAS IN THIS CONDITION UNTIL OVERLYING CONSTRUCTION IS COMPLETE.

3.7 FILL

A. PLACE FILL MATERIAL THAT CONFORMS TO THE MATERIAL REQUIREMENTS OF THIS SECTION. PLACE FILL MATERIAL TO THE LIMITS AND ELEVATIONS SHOWN ON THE DRAWINGS.

B. PLACE FILL MATERIAL ON SURFACES THAT ARE FREE OF DEBRIS, BRANCHES, VEGETATION, MUD, ICE, AND OTHER DELETERIOUS MATERIALS.

C. PLACE FILL MATERIAL IN LOOSE LIFTS WITH A MAXIMUM THICKNESS OF 8 INCHES. IN AREAS WHERE COMPACTION IS TO BE PERFORMED USING HAND-OPERATED EQUIPMENT, PLACE FILL MATERIAL IN LOOSE LIFTS WITH A MAXIMUM THICKNESS OF 4 INCHES.

D. CONTINUOUSLY REMOVE VISIBLE ROCK PARTICLES WITH A MAXIMUM DIMENSION LARGER THAN HALF OF THE LOOSE LIFT THICKNESS.

E. PLACE FILL IN HORIZONTAL LIFTS, BENCHING INTO EMBANKMENTS FOR THE FULL LIFT DEPTH.

F. PRIOR TO PLACING A LIFT OF FILL MATERIAL OVER A PREVIOUSLY COMPACTED LIFT, THOROUGHLY SCARIFY THE PREVIOUS LIFT TO A DEPTH OF APPROXIMATELY 2 INCHES BY DISCING, RAKING, OR TRACKING. MOISTURE CONDITION THE PRECEDING LIFT IN ACCORDANCE WITH THIS SECTION IF ITS SURFACE MOISTURE CONTENT IS NOT WITHIN THE RANGE OF ACCEPTABLE MOISTURE CONTENTS SPECIFIED IN THIS SECTION.

G. THE TRAFFICKING OF SCARIFIED SURFACES BY TRUCKS OR OTHER EQUIPMENT, EXCEPT COMPACTION EQUIPMENT AND WATER TRUCKS WHEN NECESSARY, IS NOT PERMITTED.

H. THE MAXIMUM ACCEPTABLE SOIL CLOD SIZE AFTER PROCESSING SHALL BE 3 INCHES OR HALF THE THICKNESS OF THE LIFT, WHICHEVER IS LESS. REDUCE CLOD SIZE BY DISCING, RAKING, TRACKING, USING A SOIL STABILIZER, OR OTHER MEANS, METHODS, AND TECHNIQUES.

I. COMPACT GENERAL FILL MATERIAL IN EACH LIFT TO AT LEAST 95 PERCENT OF ITS STANDARD PROCTOR MAXIMUM DRY DENSITY AS DETERMINED BY ASTM D698. IN AREAS UNDER ROADS, COMPACT THE UPPERMOST LIFT OF FILL MATERIAL TO AT LEAST 98 PERCENT OF ITS STANDARD PROCTOR MAXIMUM DRY DENSITY AS DETERMINED BY ASTM D698. COMPACT FILL MATERIAL AT A MOISTURE CONTENT WITHIN ±3 PERCENTAGE POINTS OF THE STANDARD PROCTOR OPTIMUM MOISTURE CONTENT AS DETERMINED BY ASTM D698.

J. MOISTURE CONDITION THE FILL MATERIAL TO ACHIEVE THE COMPACTION REQUIREMENTS SPECIFIED IN THIS SECTION. DURING WETTING OR DRYING, REGULARLY DISC, RAKE, OR OTHERWISE MIX THE MATERIAL TO THOROUGHLY BLEND THE MOISTURE THROUGHOUT THE LIFT.

K. DO NOT PLACE FILL ON A FROZEN SURFACE, OR PLACE FROZEN FILL. IF FILL PLACEMENT IS NECESSARY IN AREAS WITH FROZEN SURFACES, REMOVE FROZEN MATERIAL PRIOR TO PLACING SUBSEQUENT FILL LIFTS.

L. DO NOT COMPACT FILL MATERIAL AT TEMPERATURES BELOW 32°F UNLESS AUTHORIZED BY THE ENGINEER.

M. DO NOT PLACE FILL DURING PERIODS OF SIGNIFICANT PRECIPITATION UNLESS AUTHORIZED BY THE ENGINEER.

N. REMOVE, REWORK, OR REPLACE FILL THAT DOES NOT CONFORM TO COMPACTION REQUIREMENTS.

3.8 FIELD QUALITY CONTROL/ACCEPTANCE CRITERIA

A. CONTRACTOR WILL MONITOR MATERIAL STOCKPILES FOR NON-COMPLIANT MATERIALS.

B. THE CQC CONTRACTOR WILL PERFORM CONFORMANCE TESTING ON MATERIALS TO CONFIRM COMPLIANCE WITH THIS SECTION. CONTRACTOR SHALL PROVIDE EQUIPMENT, SUCH AS SHOVELS, HAND AUGERS, AND BACKHOES, AND LABOR TO OBTAIN CONFORMANCE SAMPLES FROM EXCAVATIONS, STOCKPILES, AND BORROW AREAS. CONFORMANCE TESTING SHALL INCLUDE STANDARD PROCTOR (ASTM D698), PARTICLE SIZE DISTRIBUTION (ASTM D6913 OR D7928), ATTERBERG LIMITS (ASTM D4318) AND USCS CLASSIFICATION (ASTM D2487) AT A MINIMUM FREQUENCY OF ONE TEST PER 10,000 CY OF MATERIAL, BASED ON IN-PLACE COMPACTED VOLUME. A MINIMUM OF 3 PROCTOR TESTS SHALL BE PERFORMED FOR EACH MATERIAL.

C. THE CQC CONTRACTOR WILL OBSERVE AND DOCUMENT PROOF ROLLING OF THE SUBGRADE FOR MASS FILL AREAS, AND INSPECTION OF THE EXCAVATED SUBGRADE UNDER FOUNDATIONS, SLABS ON GRADES AND SITE STRUCTURES. PROOF ROLLING DOCUMENTATION PROVIDED TO THE ENGINEER WILL INCLUDE DESCRIPTION OF AREAS THAT PASS PROOF ROLLING AND AREAS THAT FAIL PROOF ROLLING; FOR AREAS THAT FAIL PROOF ROLLING, CONTRACTOR WILL OBSERVE AND DOCUMENT THE CONTRACTOR'S METHOD OF REPAIR FOR THE AREA.

D. THE CQC CONTRACTOR WILL PERFORM PERFORMANCE TESTING ON GENERAL FILL TO CONFIRM COMPLIANCE WITH THIS SECTION. COMPACTION TESTING (ASTM D6938) SHALL BE PERFORMED AT A MINIMUM FREQUENCY OF 1 TEST PER ACRE PER LIFT FOR AREA FILLS, 1 TEST PER 2,500 SF OF LIFT AREA WITHIN THE FOOT PRINT OF FOUNDATIONS, SLABS ON GRADE OR SITE STRUCTURES, AND AT LEAST 1 TEST PER 250 LINEAR FEET ALONG LINEAR FEATURES SUCH AS ROADS, BERMS AND TRENCHES.

E. IF THE CQC CONTRACTOR TESTS INDICATE THAT ANY PORTION OF THE FILL OR SUBGRADE DO NOT CONFORM TO THE REQUIREMENTS OF THIS SECTION, THE CONTRACTOR WILL DELINEATE THE EXTENT OF THE NON-CONFORMING AREA. CONTRACTOR SHALL REWORK THE NONCONFORMING AREA UNTIL IT CONFORMS TO THE REQUIREMENTS OF THIS SECTION.

F. TOLERANCES:
1. PERFORM THE EARTHWORK CONSTRUCTION TO WITHIN ±0.1 FEET OF THE ELEVATIONS SHOWN ON THE DRAWINGS.

G. BASIS OF ACCEPTANCE: THE COMPANY WILL APPROVE THE WORK WHEN THE CONTRACTOR HAS THOROUGHLY DEMONSTRATED THAT THE WORK IS COMPLETE AND SATISFACTORY TO THE COMPANY

3.9 SURVEY CONTROL

A. SURVEY THE LOCATIONS, LIMITS, AND ELEVATIONS OF EXCAVATIONS, STOCKPILES, PREPARED SUBGRADE, AND FILL IN ACCORDANCE WITH THE SURVEYING NOTES.

User:EEBERT Spec:AUS-NCSMOD File:G:\APROJECTS\TYCO\W001605\CADD\DITCH INTERIM ACTION\DITCH A ONLY PACKAGE\DRAFT3_G3-SPECIFICATIONS (SHEET 1 OF 6).DWG Scale:1:1 SavedDate:10/24/2018 Time:06:58 Plot Date: Ebert, Liz: 10/30/2018 06:43 : Layout:G3

ARCADIS

LEGAL ENTITY:
ARCADIS U.S., Inc.
ARCHITECTURAL AND
ENGINEERING SERVICES, INC.

COPYRIGHT: 2015

CONSULTANTS

NO.	DATE	ISSUED FOR	BY
0	10/30/18	DRAFT DESIGN PACKAGE FOR REVIEW	EE

SEALS

BENJAMIN A. VERBURG 31794 WAUWATOSA WI

DATE:	10/30/18
PROJECT NO:	WI001605.0001
FILE NAME:	DRAFT-3_G3-SPECIFICATIONS (SHEET 1 OF 6)
DESIGNED BY:	BV
DRAWN BY:	EE
CHECKED BY:	MA

2700 INDUSTRIAL PARKWAY SOUTH
MARINETTE, WISCONSIN 54143
715-362-0700
ANSUL FTC SITE

DITCH INTERIM ACTION DESIGN

ARCADIS PROJ. NO. WI001605.0001

SHEET TITLE

SPECIFICATIONS (SHEET 1 OF 5)

SCALE:

G3

SHEET ___ OF 1

TRENCH EXCAVATION AND BACKFILL

PART 1 - GENERAL

1.1 DESCRIPTION

A. SCOPE:
1. WORK IN THIS SECTION INCLUDES TRENCHING AND BACKFILLING AND PLACEMENT OF PIPE AND MANHOLE EMBEDMENT FILL.

B. RELATED DOCUMENTS:
1. DRAWINGS.
2. SYSTEM REQUIREMENTS DOCUMENT.

1.2 REFERENCES

A. CONTRACTOR SHALL USE THE MOST RECENT VERSION OF STANDARDS AND CODES, UNLESS NOTED OTHERWISE.

B. OCCUPATIONAL SAFETY AND HEALTH ADMINISTRATION (OSHA).

C. MASTER SPECIFICATIONS, WISCONSIN DEPARTMENT OF ADMINISTRATION (DOA)

D. AMERICAN SOCIETY FOR TESTING AND MATERIALS (ASTM).
1. ASTM D698 -STANDARD TEST METHODS FOR LABORATORY COMPACTION CHARACTERISTICS OF SOIL USING STANDARD EFFORT (12 400 FT-LBF/FT3 (600 KN-M/M3)).
2. ASTM D2487 - STANDARD PRACTICE FOR CLASSIFICATION OF SOILS FOR ENGINEERING PURPOSES (UNIFIED SOIL CLASSIFICATION SYSTEM).
3. ASTM D6913 - STANDARD TEST METHODS FOR PARTICLE-SIZE DISTRIBUTION (GRADATION) OF SOILS USING SIEVE ANALYSIS
4. ASTM D7928 - STANDARD TEST METHOD FOR PARTICLE-SIZE DISTRIBUTION (GRADATION) OF FINE-GRAINED SOILS USING THE SEDIMENTATION (HYDROMETER) ANALYSIS

1.3 SUBMITTALS

A. ACTION SUBMITTALS: SUBMIT THE FOLLOWING:
1. PRODUCT DATA:
a. A CATALOGUE CUT SHEET FOR MARKER TAPE.
b. FOR EACH SOURCE OF PIPE AND MANHOLE EMBEDMENT FILL MATERIALS:
1) SOURCE OF THE PIPE AND MANHOLE EMBEDMENT FILL MATERIALS.
2) WRITTEN CERTIFICATION FROM THE MANUFACTURER OR SUPPLIER THAT MATERIALS CONFORM TO THE REQUIREMENTS OF THIS SECTION.
3) RESULTS OF TESTING PERFORMED BY THE MANUFACTURER OR SUPPLIER THAT CONFIRM THAT MATERIALS CONFORM TO THE REQUIREMENTS OF THIS SECTION.
c. A 50 POUND REPRESENTATIVE SAMPLE OF THE MATERIAL FROM EACH SOURCE OF MANHOLE AND EMBEDMENT FILL MATERIAL FOR VISUAL EXAMINATION AND CONFORMANCE TESTING.
d. ALTERNATIVE METHODS FOR PIPE INSTALLATION MAY BE CONSIDERED BY THE CONTRACTOR, SUBJECT TO REVIEW AND APPROVAL BY THE COMPANY (INCLUDING DIRECTIONAL DRILLING). FOR ALTERNATIVE METHODS TO BE CONSIDERED A LIST OF EQUIPMENT AND MATERIALS; DESCRIPTION OF CONSTRUCTION MEANS, METHODS, AND TECHNIQUES; AND OTHER DETAILED INFORMATION NECESSARY TO FULLY DESCRIBE THE NEW ALTERNATIVE METHOD(S).

B. INFORMATIONAL SUBMITTALS: SUBMIT THE FOLLOWING:
1. CERTIFICATIONS:
a. TRENCH SHORING AND WALKWAY DESIGN SHALL BE CERTIFIED BY A PROFESSIONAL ENGINEER REGISTERED IN THE STATE OF WISCONSIN.
2. QUALITY CONTROL:
a. LIST OF EQUIPMENT AND MATERIALS; DESCRIPTION OF CONSTRUCTION MEANS, METHODS, AND TECHNIQUES; AND OTHER REQUIRED INFORMATION FOR TRENCHING AND BACKFILLING AND PLACEMENT OF PIPE AND MANHOLE EMBEDMENT FILL.

PART 2 - PRODUCTS

2.1 MATERIALS

A. OBTAIN BACKFILL MATERIAL FROM EXCAVATION AND TRENCHING INCLUDED IN THIS CONTRACT. ADDITIONAL MATERIAL, IF REQUIRED, SHALL BE OBTAINED FROM THE ON SITE STOCKPILES OR ON-SITE BORROW AREAS IDENTIFIED BY THE ENGINEER.

B. FURNISH NATURAL SAND OR SAND MANUFACTURED FROM STONE FOR PIPE EMBEDMENT FILL MATERIAL.

C. PRIOR TO USE, VERIFY WITH THE COMPANY THAT BACKFILL MATERIALS CONFORM TO THE REQUIREMENTS FOR THEIR INTENDED USE.

D. BACKFILL MATERIAL FOR PIPES; ELECTRICAL CONDUIT; AND VALVE HOUSES AND STRUCTURES SHALL CONFORM TO THE MATERIAL REQUIREMENTS FOR FILL SPECIFIED IN THE EARTHWORK NOTES.

E. FURNISH TRENCH SHORING AND WALKWAY MATERIALS, WHERE REQUIRED, IN ACCORDANCE WITH THE CERTIFIED TRENCH SHORING AND WALKWAY DESIGN.

F. OBTAIN CONSTRUCTION WATER FOR MOISTURE CONDITIONING BACKFILL FROM THE ON SITE WATER FILLING STATIONS SHOWN ON THE DRAWINGS.

2.2 EQUIPMENT

A. FURNISH EQUIPMENT TO PERFORM TRENCHING AND BACKFILLING AND PIPE AND MANHOLE EMBEDMENT FILL MATERIAL PLACEMENT IN ACCORDANCE WITH THIS SECTION.

PART 3 - EXECUTION

3.1 EXISTING CONDITIONS

A. VERIFY EXISTING GRADES IN ACCORDANCE WITH THE SURVEYING NOTES.

B. IF A VERTEBRATE PALEONTOLOGICAL OR ARCHAEOLOGICAL ARTIFACT DISCOVERY IS MADE DURING TRENCHING, STOP WORK IN THE AREA OF DISCOVERY AND NOTIFY THE COMPANY. WORK IN THE AREA OF DISCOVERY SHALL NOT RESUME UNTIL AUTHORIZED BY THE COMPANY.

C. IDENTIFY AND STAKE EXISTING ABOVE AND BELOW GROUND UTILITIES IN VICINITY OF TRENCHING. STAKING AND/OR MARKING SHALL BE IN ACCORDANCE WITH THE SURVEYING NOTES AND AS APPROVED BY THE COMPANY.

D. PROTECT EXISTING ABOVE AND BELOW GROUND UTILITIES.

E. IN AREAS OF TRENCHING AND BACKFILLING, DO NOT INTERRUPT THE EXISTING UTILITY SERVICE UNLESS AUTHORIZED BY THE COMPANY.

F. DO NOT DAMAGE OR DISTURB PERMANENT SURVEY MONUMENTS, FINISHED CONSTRUCTION AREAS AND STRUCTURES, EXISTING UTILITIES AND STRUCTURES. DAMAGE SHALL BE REPAIRED OR REPLACED TO THE ORIGINAL CONDITION AT THE CONTRACTOR'S EXPENSE.

G. PERFORM CLEARING, GRUBBING AND STRIPPING IN ACCORDANCE WITH THE CLEARING, GRUBBING, AND STRIPPING NOTES.

H. PRIOR TO PERFORMING WORK DESCRIBED IN THIS SECTION, INSTALL AND MAINTAIN SURFACE WATER MANAGEMENT AND EROSION AND SEDIMENT CONTROLS IN ACCORDANCE WITH THE SURFACE WATER MANAGEMENT AND EROSION CONTROL NOTES.

I. INSTALL CONSTRUCTION SAFETY FENCE IN ACCORDANCE WITH THE EARTHWORK NOTES.

J. STABILIZE DISTURBED AREAS IN ACCORDANCE WITH TEMPORARY OR PERMANENT SEEDING AND APPLY MULCH WITHIN TIME FRAMES IDENTIFIED IN THE CONTRACT DOCUMENTS AND UNDER APPLICATION CONDITIONS AS DESCRIBED IN THE ODNR STANDARDS.

K. IMPLEMENT DUST CONTROL.

3.2 TRENCHING

A. TRENCHES FOR INSTALLATION OF PIPES, AND OTHER STRUCTURES SHALL BE TO THE DEPTHS, ELEVATIONS, AND DIMENSIONS SHOWN ON THE DRAWINGS. STOCKPILE EXCESS MATERIAL FROM TRENCHING AT LOCATIONS DESIGNATED BY THE COMPANY. STOCKPILE MATERIALS IN ACCORDANCE WITH THE EARTHWORK NOTES.

B. USE SHORING METHODS ACCEPTED BY THE COMPANY. SHORING SHALL CONFORM TO APPLICABLE LOCAL, STATE, AND FEDERAL REQUIREMENTS, AND SHALL BE INSTALLED IN ACCORDANCE WITH THE SHORING AND WALKWAY DESIGN CERTIFIED BY THE WISCONSIN-REGISTERED PROFESSIONAL ENGINEER. PROVIDE APPROPRIATE NON-SKID SURFACE WALKWAYS FOR ACCESS ACROSS OPEN TRENCHES, SUCH AS CONSTRUCTED WOODEN WALKWAYS, AND INSTALLED IN ACCORDANCE WITH THE DESIGN CERTIFIED BY THE WISCONSIN-REGISTERED PROFESSIONAL ENGINEER. STORE SHORING AND WALKWAY MATERIALS ON-SITE PRIOR TO BEGINNING TRENCHING ACTIVITIES. MAINTAIN THE SAFETY AND STABILITY OF EXCAVATIONS AND TRENCHES BY PROPERLY INSTALLING SUPPORTS ACCORDING TO THE CERTIFIED DESIGN AND THE MANUFACTURER'S REQUIREMENTS.

C. PROTECT AND MAINTAIN THE TRENCH BOTTOM. REMOVE ROCK FRAGMENTS OR RAVELED MATERIALS THAT COLLECT ON THE TRENCH BOTTOM. BACKFILL OVER-EXCAVATIONS WITH FILL IN ACCORDANCE WITH THIS SECTION AND THE EARTHWORK NOTES. EXCAVATE UNSUITABLE SOIL ENCOUNTERED AT THE TRENCH BOTTOM AND BACKFILL TO TRENCH BOTTOM ELEVATION WITH FILL IN ACCORDANCE WITH THE EARTHWORK NOTES.

D. WHERE TRENCHES WILL BE EXCAVATED IN FILL AREAS, PERFORM TRENCHING ONLY AFTER FILL HAS REACHED AT LEAST 24 INCHES ABOVE THE TOP OF THE PIPE DESIGN ELEVATION UNLESS OTHERWISE SHOWN ON THE DRAWINGS.

E. EXCAVATE FOR STRUCTURES TO AT LEAST 6 INCHES BELOW FOUNDATION ELEVATIONS AND PLACE AGGREGATE BASE OR BACKFILL TO THE FOUNDATION ELEVATIONS SHOWN ON THE DRAWINGS. AGGREGATE BASE AND FILL SHALL BE IN ACCORDANCE WITH THE AGGREGATE BASE AND EARTHWORK NOTES.

F. FOR PIPE INSTALLATION, LIMIT THE MAXIMUM LENGTH OF OPEN TRENCH TO 200 FEET IN ADVANCE AND 200 FEET BEHIND PIPE UNLESS OTHERWISE AUTHORIZED BY THE COMPANY.

G. CONTINUOUSLY DEWATER TRENCHES WHEN WATER IS PRESENT. PERFORM DEWATERING IN ACCORDANCE WITH THE EARTHWORK NOTES.

H. DO NOT LEAVE THE BOTTOM OF TRENCHES ROUGH OR UNEVEN; SMOOTH OUT THE BOTTOM OF TRENCHES TO THE REQUIRED DESIGN.

3.3 BACKFILLING

A. GENERAL:
1. DO NOT BACKFILL WITH FROZEN OR SATURATED MATERIAL.
2. DO NOT BACKFILL OVER FROZEN, WET, OR SOFT TRENCH BOTTOM OR SIDE SLOPES. REMOVE MATERIALS THAT ARE FROZEN, WET, OR SOFT AS SPECIFIED IN THIS SECTION.
3. DO NOT DISTURB OR DAMAGE PIPING, OR STRUCTURES DURING BACKFILLING; DAMAGED MATERIALS SHALL BE REPLACED AT THE CONTRACTOR'S EXPENSE.
4. DO NOT USE COMPACTION EQUIPMENT THAT EXERTS GREATER THAN 10 POUNDS PER SQUARE INCH (PSI) GROUND PRESSURE OVER PIPING THAT IS COVERED BY LESS THAN 12 INCHES OF BACKFILL MATERIAL.

C. PLACEMENT OF PIPE EMBEDMENT FILL FOR PIPES:
1. PLACE PIPE EMBEDMENT FILL IN MAXIMUM 6-INCH THICK LOOSE LIFTS AND COMPACT EACH LIFT TO THE ELEVATION OF THE BOTTOM OF THE PIPE.
2. COMPACT EACH LIFT OF PIPE EMBEDMENT FILL WITH A MINIMUM OF FOUR PASSES WITH VIBRATORY HAND COMPACTION EQUIPMENT.
3. GRADE THE PIPE EMBEDMENT FILL TO THE BOTTOM OF THE PIPE DESIGN ELEVATION PRIOR TO PLACING PIPE.
4. PLACE PIPE ON TOP OF THE COMPACTED AND GRADED PIPE EMBEDMENT FILL.
5. PLACE PIPE EMBEDMENT FILL IN MAXIMUM 6-INCH-THICK LOOSE LIFTS TO THE DEPTH SHOWN ON THE DRAWINGS. COMPACT EACH LIFT WITH A MINIMUM OF FOUR PASSES WITH VIBRATORY HAND COMPACTION EQUIPMENT, OR BY OTHER MEANS, METHODS, AND TECHNIQUES SUCH THAT INTIMATE CONTACT WITH THE PIPE IS MAINTAINED.

D. PLACEMENT OF BACKFILL MATERIAL FOR PIPES:
1. AFTER PLACEMENT AND COMPACTION OF PIPE EMBEDMENT FILL TO THE LIMITS SHOWN ON THE DRAWINGS, PLACE BACKFILL MATERIAL IN MAXIMUM 4 INCH THICK LOOSE LIFTS TO A MINIMUM DEPTH OF 12-INCHES ABOVE THE PIPE. AFTER 12-INCHES OF MATERIAL HAS BEEN PLACED ABOVE THE PIPE, PLACE BACKFILL MATERIAL IN MAXIMUM 8 INCH THICK LOOSE LIFTS.
2. COMPACT THE BACKFILL MATERIAL IN EACH LIFT TO THE SPECIFICATIONS FOR FILL MATERIAL SPECIFIED IN THE EARTHWORK NOTES TO A MINIMUM ELEVATION OF 3 FEET ABOVE THE TOP OF PIPE USING A WALK-BEHIND PAD-FOOT COMPACTOR, HAND TAMPER, OR VIBRATORY PLATE COMPACTOR, OR BY OTHER MEANS, METHODS, AND TECHNIQUES.
3. CONSTRUCTION EQUIPMENT SHALL NOT BE ALLOWED OVER THE TOP OF PIPES UNTIL A MINIMUM OF 3 FEET OF BACKFILL MATERIAL HAS BEEN PLACED AND COMPACTED ABOVE THE TOP OF PIPES UNLESS OTHERWISE APPROVED BY THE ENGINEER.

E. PLACE MARKER TAPE IN BACKFILL BELOW FINISHED ELEVATION ABOVE UNDERGROUND PIPES, CONTROL CABLES, AND ELECTRICAL CONDUITS AS SHOWN ON THE DRAWINGS. PLACE MARKER TAPE TO THE DEPTH SHOWN ON THE DRAWINGS.

3.4 FIELD QUALITY CONTROL/ACCEPTANCE CRITERIA

A. CQC SHALL BE PERFORMED IN ACCORDANCE WITH THE CONTRACT DOCUMENTS AND THE CQA PROJECT PLAN.

B. CONTRACTOR SHALL COORDINATE CONSTRUCTION ACTIVITIES THROUGH THE COMPANY TO ACCOMMODATE THE ACTIVITIES REQUIRED OF THE CQC CONTRACTOR.

C. CQC CONTRACTOR WILL MONITOR TRENCHING AND BACKFILLING AS SPECIFIED IN THIS SECTION AND THE CQA PROJECT PLAN.

D. CQC CONTRACTOR WILL PERFORM PERFORMANCE TESTING ON THE PIPE EMBEDMENT FILL AND BACKFILL PLACEMENT TO CONFIRM COMPLIANCE WITH THIS SECTION AND THE CQA PROJECT PLAN. CONTRACTOR SHALL PROVIDE EQUIPMENT, SUCH AS SHOVELS, HAND AUGERS, AND BACKHOES, AND LABOR TO ASSIST CQC CONTRACTOR IN OBTAINING SAMPLES FROM EXCAVATIONS, TRENCHING, STOCKPILES, AND BORROW AREAS. THE PERFORMANCE TESTING TO BE PERFORMED AND TESTING FREQUENCIES SHALL BE IN ACCORDANCE WITH THE CQA PROJECT PLAN AND THE EARTHWORK NOTES.

E. CQC CONTRACTOR AND COMPANY WILL REVIEW AND VERIFY AS-BUILT BOTTOM OF TRENCH ELEVATIONS PRIOR TO BACKFILLING.

F. TOLERANCES:
1. TOP OF PIPE AND EMBEDMENT FILL MATERIAL SHALL BE PLACED WITHIN 0.0 TO +0.2 FEET OF THE MINIMUM THICKNESS SHOWN ON THE DRAWINGS.
2. BACKFILL MATERIAL SHALL BE PLACED WITHIN 0.0 TO +0.1 FEET OF THE EXISTING GROUND OR FINISHED ELEVATION SHOWN ON THE DRAWINGS.

G. BASIS OF ACCEPTANCE: THE COMPANY WILL APPROVE THE WORK WHEN THE CONTRACTOR HAS THOROUGHLY DEMONSTRATED THAT THE WORK IS COMPLETE AND SATISFACTORY TO THE ENGINEER.

3.5 SURVEY CONTROL

A. SURVEY THE LOCATIONS, LIMITS, AND ELEVATIONS OF THE PIPE AND MANHOLE EMBEDMENT FILL AND BACKFILL IN ACCORDANCE WITH THE SURVEYING NOTES.

B. SURVEY THE LOCATIONS, LIMITS, AND ELEVATIONS OF STRUCTURES AND PIPES, INCLUDING INVERT ELEVATIONS, IN ACCORDANCE WITH THE SURVEYING NOTES.

AGGREGATE BASE

PART 1- GENERAL

1.1 DESCRIPTION

A. SCOPE:
1. WORK IN THIS SECTION INCLUDES MATERIAL AND PLACEMENT REQUIREMENTS FOR HEAVY DUTY AGGREGATE SURFACING FOR ROADS AND AGGREGATE SURFACES AS SHOWN ON THE DRAWINGS.

B. RELATED DOCUMENTS:
1. DRAWINGS.
2. SYSTEM REQUIREMENTS DOCUMENT.

1.2 REFERENCES

A. CONTRACTOR SHALL USE THE MOST RECENT VERSION OF STANDARDS AND CODES, UNLESS NOTED OTHERWISE.

B. OCCUPATIONAL SAFETY AND HEALTH ADMINISTRATION (OSHA).

C. MASTER SPECIFICATIONS, WISCONSIN DEPARTMENT OF ADMINISTRATION (DOA).

D. ASTM D6913 - STANDARD TEST METHODS FOR PARTICLE-SIZE DISTRIBUTION (GRADATION) OF SOILS USING SIEVE ANALYSIS

1.3 SUBMITTALS

A. FOR EACH SOURCE OF AGGREGATE BASE MATERIAL, SUBMIT THE FOLLOWING TO THE ENGINEER IN ACCORDANCE WITH THE CONTRACT DOCUMENTS:
1. SOURCE OF THE MATERIAL ALONG WITH WRITTEN CERTIFICATION FROM THE SUPPLIER THAT THE AGGREGATE BASE MATERIAL CONFORM TO THE REQUIREMENTS OF WISCONSIN DOA MASTER SPECIFICATIONS AND THIS SECTION; AND
2. TEST RESULTS AS REQUIRED BY WISCONSIN DOA DEMONSTRATING THAT THE AGGREGATE BASE MATERIAL CONFORMS TO THE REQUIREMENTS OF WISCONSIN DOA AND THIS SECTION.

B. PRIOR TO COMMENCEMENT OF WORK DESCRIBED IN THIS SECTION, SUBMIT TO THE ENGINEER IN ACCORDANCE WITH THE CONTRACT DOCUMENTS, A LIST OF EQUIPMENT AND MATERIALS; DESCRIPTION OF CONSTRUCTION MEANS, METHODS, AND TECHNIQUES.

C. PRIOR TO COMMENCEMENT OF WORK DESCRIBED IN THIS SECTION, SUBMIT TO THE ENGINEER IN ACCORDANCE WITH THE CONTRACT DOCUMENTS, A TRAFFIC CONTROL PLAN, INCLUDING ROAD SIGNS, OTHER TRAFFIC CONTROL DEVICES AND FLAGGING REQUIREMENTS, IN ACCORDANCE WITH WISCONSIN DOA.

1.4 PRODUCT DELIVERY, STORAGE, AND HANDLING

A. PACKING, SHIPPING, HANDLING AND UNLOADING:
1. DELIVER MATERIALS TO THE SITE TO ENSURE UNINTERRUPTED PROGRESS OF THE WORK. DELIVER AGGREGATE BASE IN AMPLE TIME TO PREVENT DELAY OF THE WORK.

B. ACCEPTANCE AT SITE:
1. ALL BOXES, CRATES AND PACKAGES SHALL BE INSPECTED BY CONTRACTOR UPON DELIVERY TO THE SITE. CONTRACTOR SHALL NOTIFY THE ENGINEER, IN WRITING, IF ANY LOSS OR DAMAGE EXISTS TO EQUIPMENT OR COMPONENTS.

PART 2- PRODUCTS

2.1 MATERIALS

A. FURNISH AGGREGATE BASE MATERIAL CONFORMING TO THE REQUIREMENTS OF WISCONSIN DOA MASTER SPEFICIATIONS.

B. OBTAIN MATERIAL FOR FILL IN ACCORDANCE WITH THE EARTHWORK NOTES.

2.2 EQUIPMENT

A. FURNISH EQUIPMENT FOR PLACEMENT OF AGGREGATE BASE IN ACCORDANCE WITH THIS SECTION.

PART 3- EXECUTION

3.1 EXISTING CONDITIONS

A. VERIFY EXISTING CONDITIONS AND SUBGRADE ELEVATIONS IN ACCORDANCE WITH THE SURVEYING NOTES, PRIOR TO PLACEMENT OF AGGREGATE BASE.

B. PRIOR TO PERFORMING WORK DESCRIBED IN THIS SECTION, INSTALL AND MAINTAIN SURFACE WATER MANAGEMENT AND EROSION AND SEDIMENT CONTROLS IN ACCORDANCE WITH THE SURFACE WATER MANAGEMENT AND EROSION CONTROL NOTES.

C. PLACE AGGREGATE BASE AFTER COMPLETION OF THE FOLLOWING:
1. WRITTEN CONFIRMATION OF COMPLIANCE OF AGGREGATE BASE MATERIAL BY THE ENGINEER.
2. WRITTEN CONFIRMATION OF COMPLIANCE OF UNDERLYING LAYERS, INCLUDING ACCEPTANCE OF SURVEY RESULTS FOR SUBGRADE, BY THE ENGINEER.

D. STOCKPILE MATERIALS IN ACCORDANCE WITH THE EARTHWORK NOTES.

E. IMPLEMENT DUST CONTROL.

3.2 SUBGRADE PREPARATION

A. PREPARE THE SUBGRADE IN ACCORDANCE WITH THE EARTHWORK NOTES PRIOR TO PLACEMENT OF AGGREGATE BASE.

3.3 AGGREGATE BASE

A. CONSTRUCT THE AGGREGATE BASE LAYER TO THE THICKNESS, ELEVATIONS, AND LIMITS SHOWN ON THE DRAWINGS.

B. AGGREGATE BASE SHALL BE FREE OF DEBRIS, FOREIGN OBJECTS, ORGANICS, AND OTHER DELETERIOUS MATERIALS.

C. SPREAD AND PLACE THE AGGREGATE BASE IN ACCORDANCE WITH WISCONSIN DOA MASTER SPECIFICATIONS.

D. COMPACT THE AGGREGATE BASE IN ACCORDANCE WITH OHIO C&MS ITEM 304.05.

3.4 FIELD QUALITY CONTROL/ACCEPTANCE CRITERIA

A. CONSTRUCTION QUALITY CONTROL (CQC) SHALL BE PERFORMED IN ACCORDANCE WITH THE CONTRACT DOCUMENTS AND THE CQA PROJECT PLAN.

B. CONTRACTOR SHALL COORDINATE CONSTRUCTION ACTIVITIES THROUGH THE ENGINEER TO ACCOMMODATE THE ACTIVITIES REQUIRED OF THE CQC CONTRACTOR.

C. CONTRACTOR SHALL NOTIFY THE ENGINEER PRIOR TO PLACEMENT OF AGGREGATE BASE MATERIAL IN NEW LOCATIONS.

D. CQC CONTRACTOR WILL PERFORM PERFORMANCE TESTING ON AGGREGATE BASE TO ESTABLISH COMPLIANCE WITH THIS SECTION AND OHIO C&MS REQUIREMENTS. THE PERFORMANCE TESTING TO BE PERFORMED AND TESTING FREQUENCIES SHALL BE IN ACCORDANCE WITH THE CQA PROJECT PLAN.

E. TOLERANCES:
1. ROAD ALIGNMENTS, SHALL BE WITHIN ±0.1 FEET OF THE LOCATIONS SHOWN ON THE DRAWINGS. TEMPORARY CONSTRUCTION ACCESS ALIGNMENT SHALL BE WITHIN ±0.3 FEET OF THE LOCATIONS SHOWN ON THE DRAWINGS.
2. PLACE AGGREGATE BASE TO WITHIN ±0.1 FEET OF THE THICKNESS SHOWN ON THE DRAWINGS.
3. PLACE AGGREGATE BASE TO WITHIN ±0.1 FEET OF THE ELEVATIONS SHOWN ON THE DRAWINGS.
4. PLACE AGGREGATE BASE FOR TEMPORARY CONSTRUCTION ACCESS AND OTHER AREAS WITHIN ±0.2 FEET OF THE ELEVATIONS SHOWN ON THE DRAWINGS.

F. BASIS OF ACCEPTANCE: THE ENGINEER WILL APPROVE THE WORK WHEN THE CONTRACTOR HAS THOROUGHLY DEMONSTRATED THAT THE WORK IS COMPLETE AND SATISFACTORY TO THE ENGINEER.

3.5 SURVEY CONTROL

A. SURVEY ALIGNMENT, LOCATIONS, AND ELEVATIONS FOR AGGREGATE BASE IN ACCORDANCE WITH THE SURVEYING NOTES.

User:EGBERT Spec:AUS-NCSMOD File:G:\APROJECT\TYCO\WI001605\CAD\DITCH INTERIM ACTION\DITCH A ONLY PACKAGE\DRAFT-4_G4-SPECIFICATIONS (SHEET 2 OF 6).DWG Scale:1:1 Saved:Date:10/24/2018 Time:08:41 Plot Date: Ebert, Liz; 10/30/2018, 09:45 ; Layout:G4

GEOTEXTILES

PART 1- GENERAL

1.1 DESCRIPTION

A. SCOPE:
1. WORK IN THIS SECTION INCLUDES MATERIAL AND ACCEPTANCE, HANDLING, STORAGE, AND INSTALLATION REQUIREMENTS FOR GEOTEXTILES.

B. RELATED DOCUMENTS:
1. DRAWINGS.
2. SYSTEM REQUIREMENTS DOCUMENT.

1.2 REFERENCES

A. CONTRACTOR SHALL USE THE MOST RECENT VERSION OF STANDARDS AND CODES, UNLESS NOTED OTHERWISE.

B. OCCUPATIONAL SAFETY AND HEALTH ADMINISTRATION (OSHA).

C. AMERICAN SOCIETY FOR TESTING AND MATERIALS (ASTM).
1. ASTM D4355 - STANDARD TEST METHOD FOR DETERIORATION OF GEOTEXTILES BY EXPOSURE TO LIGHT, MOISTURE AND HEAT IN A XENON ARC TYPE APPARATUS
2. ASTM D4533 - STANDARD TEST METHOD FOR TRAPEZOID TEARING STRENGTH OF GEOTEXTILES.
3. ASTM D4632 - STANDARD TEST METHOD FOR GRAB BREAKING LOAD AND ELONGATION OF GEOTEXTILES.
4. ASTM D5261 - STANDARD TEST METHOD FOR MEASURING MASS PER UNIT AREA OF GEOTEXTILES.
5. ASTM D6193 - STANDARD PRACTICE FOR STITCHES AND SEAMS.
6. ASTM D6241 - STANDARD TEST METHOD FOR STATIC PUNCTURE STRENGTH OF GEOTEXTILES AND GEOTEXTILE-RELATED PRODUCTS USING A 50-MM PROBE.
7. ASTM D7178 - STANDARD PRACTICE FOR DETERMINING THE NUMBER OF CONSTRICTIONS M OF NON-WOVEN GEOTEXTILES AS A COMPLEMENTARY FILTRATION PROPERTY.

D. RAINWATER AND LAND DEVELOPMENT, WISCONSIN POLLUTANT DISCHARGE ELIMINATION SYSTEM (WPDES) STORM WATER DISCHARGE PERMIT PROGRAM UNDER AUTHORITY OF CH. NR 216, WISCONSIN ADMINISTRATIVE CODE.

E. MASTER SPECIFICATIONS, WISCONSIN DEPARTMENT OF ADMINISTRATION (DOA).

1.3 SUBMITTALS

A. ACTION SUBMITTALS: SUBMIT THE FOLLOWING:
1. PRODUCT DATA:
   a. MANUFACTURER'S LITERATURE, ILLUSTRATIONS, SPECIFICATIONS AND ENGINEERING DATA INCLUDING: DIMENSIONS, MATERIALS, SIZE, WEIGHT, AND PERFORMANCE DATA.
2. SHOP DRAWINGS:
   a. ASSEMBLY AND INSTALLATION.

B. INFORMATIONAL SUBMITTALS: SUBMIT THE FOLLOWING:
1. SOURCE QUALITY CONTROL:
   a. CERTIFICATION OF MINIMUM AVERAGE ROLL VALUES 95 PERCENT LOWER CONFIDENCE LIMITS AND THE CORRESPONDING TEST METHODS FOR GEOTEXTILE PROPERTIES LISTED IN THE TABLES IN THIS SECTION.
   b. MANUFACTURER'S WRITTEN RECOMMENDED MAXIMUM EXPOSURE PERIOD AFTER THE GEOTEXTILE IS UNWRAPPED FROM ITS OPAQUE COVER;
   c. RECOMMENDED LONG-TERM STORAGE REQUIREMENTS AND LIMITATIONS.
2. QUALITY CONTROL CERTIFICATES:
   a. MANUFACTURING QUALITY CONTROL CERTIFICATES SIGNED BY THE QUALITY CONTROL MANAGER APPLICABLE TO EACH ROLL OF GEOTEXTILE AS SPECIFIED IN THIS SECTION.
      1) THE SUBMITTAL SHALL INCLUDE A LIST OF ROLL NUMBERS TO BE SHIPPED INDICATING WHICH ROLLS WERE SAMPLED AND TESTED.
      2) THE CERTIFICATES SHALL STATE THAT THE GEOTEXTILES ARE CONTINUOUSLY INSPECTED AND ARE NEEDLE-FREE.
      3) THE QUALITY CONTROL CERTIFICATES SHALL ALSO INCLUDE:
         a) LOT NUMBERS, ROLL NUMBERS, AND OTHER IDENTIFICATION;
         b) SAMPLING METHODS; AND
         c) RESULTS OF QUALITY CONTROL TESTS, INCLUDING DESCRIPTIONS OF TEST METHODS USED (THE MANUFACTURER'S QUALITY CONTROL TESTS TO BE PERFORMED ARE SPECIFIED IN THIS SECTION)

1.4 PRODUCT DELIVERY, STORAGE, AND HANDLING

A. PACKING, SHIPPING, HANDLING AND UNLOADING:
1. DELIVER MATERIALS TO THE SITE TO ENSURE UNINTERRUPTED PROGRESS OF THE WORK. DELIVER GEOTEXTILE MATERIALS AND APPARATUSES IN AMPLE TIME TO PREVENT DELAY OF THE WORK.
2. HANDLING SHALL BE PERFORMED SUCH THAT DAMAGE TO GEOTEXTILE MATERIALS DOES NOT OCCUR.
3. GEOTEXTILE MATERIALS DAMAGED DURING UNLOADING, HANDLING, AND STORAGE SHALL BE REPLACED AT THE CONTRACTOR'S EXPENSE.

B. STORAGE AND PROTECTION:
1. STORE MATERIALS TO PERMIT EASY ACCESS FOR INSPECTION AND IDENTIFICATION. KEEP ALL MATERIAL OFF THE GROUND, USING PALLETS, PLATFORMS, OR OTHER SUPPORTS.
2. PROTECTION FROM SUNLIGHT, MOISTURE. EXCESSIVE HEAT OR COLD, PUNCTURE, MUD, DIRT, AND DUST OR OTHER DAMAGING CONDITIONS.

C. ACCEPTANCE AT SITE:
1. ALL BOXES, CRATES AND PACKAGES SHALL BE INSPECTED BY CONTRACTOR UPON DELIVERY TO THE SITE. CONTRACTOR SHALL NOTIFY THE COMPANY, IN WRITING, IF ANY LOSS OR DAMAGE EXISTS TO EQUIPMENT OR COMPONENTS. REPLACE LOSS AND REPAIR DAMAGE TO NEW CONDITION IN ACCORDANCE WITH MANUFACTURER'S INSTRUCTIONS.

PART 2- PRODUCTS

2.1 GEOTEXTILE

A. GEOTEXTILE MATERIALS SHALL BE FURNISHED THAT CONFORM TO OR EXCEED THE FOLLOWING REQUIREMENTS:
1. MINIMUM AVERAGE ROLL VALUES WITH 95 PERCENT LOWER CONFIDENCE LIMITS CONFORMING TO OR EXCEEDING THE REQUIRED PROPERTY VALUES SPECIFIED IN TABLE 02714-1 FOR GEOTEXTILE SEPARATOR FOR ROADS AND SURFACE WATER MANAGEMENT FEATURES
2. MANUFACTURED FROM FIRST QUALITY POLYMERS, WITH NO MORE THAN 20 PERCENT RECLAIMED POLYMER USED IN PRODUCTION.

2.2 MANUFACTURING QUALITY CONTROL

A. FOR GEOTEXTILE FURNISHED BY THE ENGINEER AND THE CONTRACTOR, THE GEOTEXTILE MATERIAL SHALL BE SAMPLED AND TESTED TO DEMONSTRATE THAT THE MATERIAL CONFORMS TO THE REQUIREMENTS OF THIS SECTION. ANY GEOTEXTILE ROLL THAT DOES NOT COMPLY WITH THE MANUFACTURING QUALITY CONTROL REQUIREMENTS SHALL NOT BE DELIVERED TO THE SITE.
1. PERFORM MANUFACTURING QUALITY CONTROL TESTS TO DEMONSTRATE THAT THE PROPERTIES CONFORM TO THE VALUES SPECIFIED IN TABLE 02714-1. PERFORM THE FOLLOWING MANUFACTURING QUALITY CONTROL TESTS AT A MAXIMUM INTERVAL OF ONE TEST FOR EACH 50,000 SQUARE FEET MANUFACTURED FOR THE FOLLOWING ASTM TEST METHODS, D4533, D4632, D5261, AND D6241. ALL TESTED ROLLS OF MATERIAL USED TO CERTIFY COMPLIANCE SHALL BE DELIVERED TO THE SITE. TEST DATA FOR ROLLS NOT DELIVERED TO THE SITE SHALL NOT BE ACCEPTED.

B. FOR GEOTEXTILE FURNISHED BY THE ENGINEER AND THE CONTRACTOR, IF A GEOTEXTILE SAMPLE FAILS TO CONFORM TO THE QUALITY CONTROL REQUIREMENTS OF THIS SECTION, THEN SAMPLE AND TEST ROLLS MANUFACTURED AT THE SAME TIME AND IN THE SAME LOT AS THE FAILING ROLL. CONTINUE TO SAMPLE AND TEST THE ROLLS UNTIL THE EXTENT OF THE FAILING ROLLS ARE BRACKETED BY PASSING ROLLS. DO NOT SUPPLY FAILING ROLLS.

2.3 PACKAGING

A. GEOTEXTILE ROLLS SHALL BE WRAPPED IN RELATIVELY IMPERMEABLE AND OPAQUE PROTECTIVE COVERS.

B. COVERS WHICH BECOME TORN OR DAMAGED SHALL BE REPAIRED BY THE CONTRACTOR WITH SIMILAR MATERIALS.

C. GEOTEXTILE ROLLS SHALL BE MARKED OR TAGGED IN ACCORDANCE WITH ASTM D4873 WITH THE FOLLOWING INFORMATION:
1. MANUFACTURER'S NAME.
2. PRODUCT IDENTIFICATION.
3. LOT OR BATCH NUMBER.
4. ROLL NUMBER.
5. ROLL DIMENSIONS.

D. GEOTEXTILE ROLLS NOT LABELED IN ACCORDANCE WITH THIS SECTION OR ON WHICH LABELS ARE ILLEGIBLE SHALL BE REJECTED AND REPLACED. THE CONTRACTOR SHALL NOTIFY THE ENGINEER OF ANY ROLLS NOT LABELED IN ACCORDANCE WITH THIS SECTION.

E. IF MANUFACTURING QUALITY CONTROL SAMPLING IS LESS THAN 100 PERCENT OF ROLLS, IDENTIFY SAMPLED ROLLS WITH A HIGHLY VISIBLE MARK OR LABEL, DISTINCT FROM UNSAMPLED ROLLS.

2.4 SHIPPING

A. GEOTEXTILES FURNISHED BY THE CONTRACTOR SHALL NOT BE SHIPPED PRIOR TO FINAL REVIEW AND CONFIRMATION OF COMPLIANCE OF MANUFACTURER'S QUALITY CONTROL SUBMITTALS IN ACCORDANCE WITH THIS SECTION AND CONFORMANCE TESTING PERFORMED BY THE CONSTRUCTION QUALITY CONTROL (CQC) CONTRACTOR IN ACCORDANCE WITH THE CQA PROJECT PLAN.

2.5 EQUIPMENT

A. FURNISH EQUIPMENT FOR ACCEPTANCE, HANDLING, STORAGE, AND INSTALLATION OF GEOTEXTILE IN ACCORDANCE WITH THIS SECTION.

PART 3- EXECUTION

3.1 INSTALLATION

A. DO NOT COMMENCE GEOTEXTILE INSTALLATION UNTIL COMPLETION OF CONFORMANCE TESTING AND WRITTEN CONFIRMATION OF COMPLIANCE OF UNDERLYING LAYERS, INCLUDING ACCEPTANCE OF CONTRACTOR'S SURVEY RESULTS, BY THE ENGINEER.

B. HANDLE GEOTEXTILES SO AS TO ENSURE THEY ARE NOT DAMAGED.

C. AFTER UNWRAPPING THE GEOTEXTILES FROM THEIR OPAQUE COVERS, DO NOT LEAVE THEM EXPOSED FOR A PERIOD IN EXCESS OF THE MANUFACTURER'S WRITTEN RECOMMENDED EXPOSURE PERIOD. GEOTEXTILES THAT ARE ALLOWED TO BE EXPOSED FOR A PERIOD IN EXCESS OF THE MANUFACTURER'S WRITTEN RECOMMENDED EXPOSURE PERIOD SHALL BE REMOVED AND REPLACED AT CONTRACTOR'S EXPENSE.

D. DURING INSTALLATION OF GEOTEXTILES, TAKE PRECAUTIONS TO PREVENT DAMAGE TO UNDERLYING LAYERS, INCLUDING RUTTING IN SUBGRADE. REPAIR DAMAGED SUBGRADE IN ACCORDANCE WITH THE EARTHWORK NOTES.

E. TAKE CARE NOT TO ENTRAP STONES, DUST, OR MOISTURE BELOW OR IN THE GEOTEXTILES.

F. EXAMINE THE GEOTEXTILE SURFACE AFTER INSTALLATION TO ENSURE THAT NO POTENTIALLY HARMFUL FOREIGN OBJECTS ARE ENTRAPPED UNDER OR WITHIN THE GEOTEXTILE. REMOVE SUCH OBJECTS THAT ARE ENTRAPPED AND REPAIR THE GEOTEXTILE IN ACCORDANCE WITH THIS SECTION. REPLACE DAMAGED GEOTEXTILES THAT ARE UNABLE TO BE REPAIRED.

G. ANCHOR OR WEIGHT GEOTEXTILES WITH SANDBAGS, OR BY OTHER MEANS, METHODS, AND TECHNIQUES, TO PREVENT DAMAGE AND DISPLACEMENT FROM WIND. INSTALL SANDBAGS DURING INSTALLATION AND MAINTAIN THEM UNTIL OVERLYING LAYERS ARE PLACED. IMMEDIATELY REMOVE DAMAGED OR LEAKING SANDBAGS.

H. SEAMS AND OVERLAPS:
1. DO NOT INSTALL HORIZONTAL SEAMS ON SLOPES THAT ARE STEEPER THAN 10 HORIZONTAL TO 1 VERTICAL (10H:1V). SEAMS SHALL BE ALONG, NOT ACROSS, THE SLOPES.
2. OVERLAP GEOTEXTILE ON FLAT AREAS A MINIMUM OF 12 INCHES.
3. OVERLAP GEOTEXTILE SEPARATOR USED FOR UNDERLYING RIPRAP SURFACE WATER MANAGEMENT FEATURES DESCRIBED IN THE SURFACE WATER MANAGEMENT AND EROSION CONTROL NOTES A MINIMUM OF 12 INCHES. NO SEAMING IS REQUIRED.

J. REPAIR:
1. REPAIR HOLES OR TEARS IN THE GEOTEXTILES USING PATCHES MADE FROM THE SAME GEOTEXTILE MATERIAL. EXTEND GEOTEXTILE PATCHES A MINIMUM OF 1 FOOT BEYOND THE DAMAGED AREA. SECURE THE PATCH IN PLACE BY HEAT LEISTER, SEWING, OR CAREFULLY PLACING AGGREGATE IN A MANNER TO ENSURE THAT THE PATCH IS NOT DISPLACED.
2. REMOVE SOIL OR OTHER MATERIAL THAT MAY HAVE BEEN ENTRAPPED UNDER OR WITHIN THE TORN GEOTEXTILES.

K. PLACEMENT OF SOIL AND AGGREGATE MATERIALS:
1. PLACE MATERIALS ON TOP OF GEOTEXTILES IN A MANNER TO ENSURE THAT:
   a. THE GEOTEXTILES AND THE UNDERLYING MATERIALS ARE NOT DAMAGED;
   b. SLIPPAGE AND DISPLACEMENT DOES NOT OCCUR BETWEEN THE GEOTEXTILE AND THE UNDERLYING LAYERS DURING PLACEMENT:
   c. EQUIPMENT IS NOT DRIVEN DIRECTLY ON THE GEOTEXTILE; AND
   d. MATERIAL TO BE PLACED ON THE GEOTEXTILE IS DUMPED ONTO THE PRECEDING LIFT AND THE MATERIAL IS CASCADED ONTO THE GEOTEXTILE IN A MANNER THAT DOES NOT SHOVE OR DISPLACE THE GEOTEXTILE.
2. PLACE THE MATERIAL OVERLYING THE GEOTEXTILE AS SOON AS PRACTICABLE AND, WHERE APPLICABLE, FROM THE BASE OF THE SLOPE UPWARDS. UNLESS OTHERWISE AUTHORIZED BY THE COMPANY, EQUIPMENT OPERATING ON MATERIAL OVERLYING THE GEOTEXTILE SHALL COMPLY WITH THE FOLLOWING REQUIREMENTS.

Allowable Equipment Ground Pressure (psi)	Thickness of Overlying Layer (ft.)
<5	1.0
<10	1.5
<20	2.0
>20	3.0

3.2 FIELD QUALITY CONTROL/ACCEPTANCE CRITERIA

A. CQC SHALL BE PERFORMED IN ACCORDANCE WITH THE CONTRACT DOCUMENTS AND THE CQA PROJECT PLAN.

B. CONTRACTOR SHALL COORDINATE CONSTRUCTION ACTIVITIES THROUGH THE ENGINEER TO ACCOMMODATE THE ACTIVITIES REQUIRED OF THE CQC CONTRACTOR.

C. CONTRACTOR SHALL NOTIFY THE ENGINEER PRIOR TO COMMENCEMENT OF WORK DESCRIBED IN THIS SECTION.

D. CONTRACTOR SHALL PROVIDE EQUIPMENT, SUCH AS AN OFF-ROAD FORKLIFT, AND LABOR TO ASSIST CQC CONTRACTOR IN OBTAINING CONFORMANCE SAMPLES FROM MATERIALS DESCRIBED IN THIS SECTION. THE CONFORMANCE TESTING TO BE PERFORMED AND TESTING FREQUENCIES SHALL BE IN ACCORDANCE WITH THE CQA PROJECT PLAN.

E. THE CQC CONTRACTOR HAS THE OPTION OF COLLECTING CONFORMANCE SAMPLES AT THE MANUFACTURING FACILITY.

F. CQC CONTRACTOR WILL MONITOR THE GEOTEXTILE INSTALLATION IN ACCORDANCE WITH THIS SECTION AND THE CQA PROJECT PLAN.

G. BASIS OF ACCEPTANCE: THE COMPANY WILL APPROVE THE WORK WHEN THE CONTRACTOR HAS THOROUGHLY DEMONSTRATED THAT THE WORK IS COMPLETE AND SATISFACTORY TO THE COMPANY.

3.3 CLEANING

A. CLEAN EXPOSED SURFACE OF ALL GREASE, DIRT AND OTHER FOREIGN MATERIALS.

B. TOUCH UP ALL MARRED OR ABRADED SURFACES.

TABLE 02714-1

REQUIRED PROPERTY VALUES FOR GEOTEXTILE CUSHION

PROPERTIES	QUALIFIER	UNITS	SPECIFIED (3) PROPERTY VALUES	TEST METHOD
Identification Requirements				
Type (-)	(-)		(-)	Nonwoven needle-punched
Polymer composition (-)	minimum		% polyester by weight	95 polypropylene or
Mass per unit area D5261	minimum		oz/yd²	16 ASTM
Mechanical Requirements				
Grab strength	minimum	lb	370	ASTM D4632(1)
Elongation	minimum	%	50	ASTM D4632(1)
Trapezoidal tear strength	minimum	lb	145	ASTM D4533(2)
Static puncture strength	minimum	lb	900	ASTM D6241
Durability Requirements				
Ultraviolet resistance	minimum	%	70	ASTM D4355

Notes:
(1) Minimum of values measured in machine and cross-machine directions with 1 x 2-inch clamp on Constant Rate of Extension (CRE) machine.
(2) Minimum value measured in machine and cross-machine direction.
(3) All values represent minimum average roll values (except Apparent opening size).
(4) Table was developed using both Ohio C&MS and ODNR Standards.
(5) mm = millimeter
% = percent
oz/yd² = ounce per square yard
sec⁻¹ = per second
lb = pound
psi = pounds per square inch

ARCADIS

LEGAL ENTITY:
ARCADIS U.S., Inc.
ARCHITECTURAL AND
ENGINEERING SERVICES, INC.

COPYRIGHT: 2015

CONSULTANTS

NO.	DATE	ISSUED FOR	BY
0	10/30/18	DRAFT DESIGN PACKAGE FOR REVIEW	EE

SEALS

DATE: 10/30/18
PROJECT NO.: WI001605.0001
FILE NAME: DRAFT-5_G5-SPECIFICATIONS (SHEET 3 OF 6)
DESIGNED BY: BV
DRAWN BY: EE
CHECKED BY: MA

2700 INDUSTRIAL PARKWAY SOUTH
MARINETTE, WISCONSIN 54143
215-362-0700
ANSUL FTC SITE
DITCH INTERIM ACTION DESIGN

ARCADIS PROJ. NO. WI001605.0001

SHEET TITLE: SPECIFICATIONS (SHEET 3 OF 5)

SCALE:

G5

SHEET ___ OF 1

User:EEBERT Spec:AUS-NCSMOD File:G:\APROJECTS\TYCO\WI001605\CADD\DITCH INTERIM ACTION\DITCH A ONLY PACKAGE\DRAFT-5_G5-SPECIFICATIONS (SHEET 3 OF 6).DWG Scale:1:1 SavedDate:10/24/2018 Time:09:02 Plot Date: Ebert, Liz; 10/30/2018, 09:52 ; Layout:G5

LOW-VOLTAGE ELECTRICAL POWER CONDUCTORS AND CABLES

A. INSULATED CABLE IN RACEWAYS:
1. APPLICATION: USE FOR CIRCUITS LOCATED INDOORS AND OUTDOORS.
2. MATERIAL: SINGLE CONDUCTOR COPPER CABLE COMPLYING WITH ASTM B3 AND ASTM B8 WITH FLAME-RETARDANT, MOISTURE- AND HEAT-RESISTANT INSULATION RATED FOR 90 DEGREES C IN DRY OR WET LOCATIONS, LISTED BY UL AS TYPE XHHW-2 COMPLYING WITH UL 44.
3. WIRE SIZES: NOT SMALLER THAN NO. 12 AWG FOR POWER AND LIGHTING AND NO. 14 AWG FOR 120-VOLT CONTROL CIRCUITS.
4. SOUTHWIRE, GENERAL CABLE, AMERICAN INSULATED WIRE, THE OKONITE COMPANY, OR APPROVED EQUAL

B. CABLE CONNECTORS, SOLDERLESS TYPE:
1. FOR WIRE SIZES NO. 4 AWG AND ABOVE, USE EITHER COMPRESSION TYPE OR BOLTED TYPE WITH SILVER-PLATED CONTACT FACES.
2. FOR WIRE SIZES UP TO AND INCLUDING NO. 6 AWG, USE COMPRESSION TYPE. ALARM AND CONTROL WIRE SHALL BE TERMINATED USING FORKED TYPE CONNECTORS AT TERMINAL BOARDS.
3. FOR WIRE SIZES NO. 250 KCMIL AND LARGER, USE CONNECTORS WITH AT LEAST TWO CABLE CLAMPING ELEMENTS OR COMPRESSION INDENTS AND PROVISION FOR AT LEAST TWO BOLTS FOR JOINING TO APPARATUS TERMINAL.
4. PROPERLY SIZE CONNECTORS TO FIT FASTENING DEVICE AND WIRE SIZE. CONNECTORS SHALL BE RATED FOR 90 DEGREE C, 600 VOLTS.
5. T&B STA-KON, BURNDY HYLUG, OR APPROVED EQUAL.

C. CABLE SPLICES:
1. FOR WIRE SIZES NO. 8 AWG AND LARGER, SPLICES SHALL BE MADE UP WITH COMPRESSION TYPE COPPER SPLICE FITTINGS. SPLICES SHALL BE TAPED AND COVERED WITH MATERIALS RECOMMENDED BY CABLE MANUFACTURER TO PROVIDE INSULATION EQUAL TO THAT ON CONDUCTORS.
2. FOR WIRE SIZES NO. 10 AWG AND SMALLER, SPLICES MAY BE MADE UP WITH PRE-INSULATED SPRING CONNECTORS.
3. FOR WET LOCATIONS, SPLICES SHALL BE WATERPROOF. COMPRESSION TYPE SPLICES SHALL BE WATERPROOFED BY SEALANT-FILLED, THICK WALL, HEAT SHRINKABLE, THERMOSETTING TUBING OR BY POURING THERMOSETTING RESIN INTO MOLD THAT SURROUNDS THE JOINED CONDUCTOR. SPRING CONNECTOR SPLICES SHALL BE WATERPROOFED WITH SEALANT FILLER.
4. SPLICES SHALL BE SUITABLY SIZED FOR CABLE, RATED 90 DEGREES C, AND 600 VOLTS.
5. COMPRESSION-TYPE SPLICES: BURNDY HYLINK, T&B COLOR-KEYED COMPRESSION CONNECTORS, OR APPROVED EQUAL.
6. SPRING CONNECTORS: BUCHANAN B-CAP, T&B WIRE CONNECTOR, OR APPROVED EQUAL.

INSTRUMENTATION AND COMMUNICATION CABLE

A. SINGLE-PAIR SHIELDED INSTRUMENT CABLES:
1. TINNED COPPER, XLPE-INSULATED STRANDED CONDUCTORS, NOT LESS THAN NO.16 AWG, TWISTED PAIR, WITH OVERALL PVC OR CPE JACKET. RATED FOR NOT LESS THAN 600 VOLTS AND COMPLYING WITH UL 1581.
2. BELDEN COMPANY, OKONITE COMPANY, OR APPROVED EQUAL.

B. ETHERNET CATEGORY 6 CABLE:
1. CATEGORY 6 SHIELDED TWISTED PAIR SOLID CABLE WITH PVC JACKET AND SHIELDED 8P8C MODULAR CONNECTORS. FACTORY TERMINATED CABLE IS REQUIRED.

HANGERS AND SUPPORTS FOR ELECTRICAL SYSTEMS

A. STRUT, FITTINGS, AND ACCESSORIES:
1. GENERAL
   a. UNLESS OTHERWISE SHOWN OR INDICATED, STRUT SHALL BE 1-5/8 INCHES BY 1-5/8 INCHES. DOUBLE STRUTS SHALL BE TWO PIECES OF THE SAME STRUT, WELDED BACK-TO-BACK AT THE FACTORY.
   b. ATTACHMENT HOLES, WHEN REQUIRED, SHALL BE FACTORY-PUNCHED ON HOLE CENTERS APPROXIMATELY EQUAL TO THE CROSS-SECTIONAL WIDTH AND SHALL BE 9/16-INCH DIAMETER.
   c. FITTINGS, BRACES, BRACKETS, HARDWARE, AND ACCESSORIES SHALL BE TYPE 316 STAINLESS STEEL.
   d. STRUT NUTS SHALL BE SPRING CAPTURED TYPE 316 STAINLESS STEEL.
   e. SQUARE AND ROUND WASHERS SHALL BE TYPE 316 STAINLESS STEEL.
2. STRUT MATERIALS SHALL BE SUITABLE FOR WET LOCATIONS. STRUT SHALL BE 12-GAGE TYPE 316 STAINLESS STEEL.

B. HANGER RODS:
1. STAINLESS STEEL., NOT LESS THAN 3/8-INCH DIAMETER, UNLESS OTHERWISE SHOWN ON THE DRAWINGS OR SPECIFIED.

C. MISCELLANEOUS HARDWARE:
1. BOLTS, SCREWS, AND WASHERS SHALL BE STAINLESS STEEL.
2. HEX NUTS: SHALL BE STAINLESS STEEL AND INCLUDE NYLON INSERTS.

RIGID CONDUITS

A. PVC-COATED RIGID STEEL CONDUIT, ELBOWS, COUPLINGS, FITTINGS AND OUTLET BODIES:
1. MATERIAL: RIGID, HEAVY-WALL, MILD STEEL, HOT-DIP GALVANIZED, SMOOTH URETHANE INTERIOR COATING, TAPERED THREADS, CAREFULLY REAMED ENDS, 3/4-INCH NPS MINIMUM SIZE WITH FACTORY EXTERIOR COATING OF 40-MIL THICK PVC.
2. COLOR: COLOR OF COATING SHALL BE THE SAME ON ALL CONDUIT AND FITTINGS.
3. ROBROY INDUSTRIES, PERMA-COTE INDUSTRIES, OR APPROVED EQUAL

B. SEALING BUSHING
1. FOR CONDUITS PASSING THROUGH EXTERIOR MASONRY BLOCK WALLS OR THROUGH CORE-DRILLED HOLES IN EXTERIOR SUBSURFACE WALLS, EXTERIOR CONCRETE WALLS, FLOOR SLABS, ROOF SLABS, AND FOR CONDUIT PASSING THROUGH INTERIOR CONCRETE WALLS OR FLOORS AND INTERIOR MASONRY BLOCK WALLS.
2. CSMI SEALING BUSHING AT THE INSIDE OF THE STRUCTURE AND TYPE CSMC SEALING BUSHING AT THE OUTSIDE OF THE STRUCTURE BY O-Z/GEDNEY, OR APPROVED EQUAL.

FLEXIBLE CONDUIT AND FITTINGS

A. FLEXIBLE CONDUIT (NON-HAZARDOUS CLASS I, DIVISION 2 HAZARDOUS AREAS)
1. MATERIAL:FLEXIBLE GALVANIZED STEEL CORE WITH SMOOTH, ABRASION-RESISTANT, LIQUID-TIGHT, POLYVINYL CHLORIDE COVER. CONTINUOUS COPPER GROUND BUILT IN FOR SIZES 3/4-INCH THROUGH 1.25-INCH. MATERIAL SHALL BE UL LISTED.
2. ANACONDA SEALTITE TYPE UA BY ANAMET ELECTRICAL, INC., LIQUATITE TYPE L.A. BY ELECTRIC-FLEX COMPANY, OR APPROVED EQUAL.

B. PVC-COATED CONDUIT FITTINGS
1. MATERIAL AND CONSTRUCTION: MALLEABLE IRON WITH STANDARD FINISH AND 40-MIL PVC EXTERIOR COATING. FITTINGS SHALL ADAPT THE CONDUIT TO STANDARD THREADED CONNECTIONS, AND SHALL HAVE AN INSIDE DIAMETER NOT LESS THAN THAT OF THE CORRESPONDING STANDARD CONDUIT SIZE.
2. ROBROY INDUSTRIES, PERMACOTE INDUSTRIES, OCAL, INC, OR APPROVED EQUAL.

PULL, JUNCTION, AND TERMINAL BOXES

A. GENERAL
1. PULL, JUNCTION, AND TERMINAL BOXES RATED AT NEMA 4X. BOXES SHALL BE APPROPERIATE FOR EACH LOCATION IN ACCORDANCE WITH NEMA REQUIREMENTS AND AS REQUIRED FOR AREA CLASSIFICATIONS.
2. TERMINAL STRIPS AND TERMINAL BLOCKS IN TERMINAL BOXES SHALL BE MOUNTED ON TERMINAL BOX SUB-PANELS.

B. MATERIALS AND CONSTRUCTION - WET, CORROSIVE, OR HAZARDOUS LOCATIONS:
1. PULL BOXES IN WET, CORROSIVE, OR OUTDOOR AREAS SHALL BE NEMA 4X.
2. BOXES FOR AREAS CLASSIFIED AS HAZARDOUS LOCATIONS, WHERE REQUIRED BY NEC, SHALL BE EXPLOSION-PROOF AND COMPLY WITH UL 886.
3. MATERIAL:
   a. IN CORROSIVE LOCATIONS, WHERE CONDUIT SYSTEM IS PVC-COATED, BOXES SHALL BE CAST METAL WITH FACTORY-APPLIED 40-MIL PVC COATING, TYPE 316 STAINLESS STEEL, OR NON-METALLIC THERMOPLASTIC OR FIBERGLASS REINFORCED PLASTIC MATERIAL.
4. GASKET:
   a. PROVIDE NEOPRENE GASKETS FOR WET AND CORROSIVE LOCATIONS.
   b. GASKETS SHALL BE AN APPROVED TYPE DESIGNED FOR THE PURPOSE. IMPROVISED GASKETS ARE NOT ACCEPTABLE.
5. ACCESS: STAINLESS STEEL COVER BOLTS.
6. FEATURES:
   a. EXTERNAL MOUNTING LUGS.
   b. DRILLED AND TAPPED CONDUIT HOLES.
   c. BOXES WHERE CONDUITS ENTER BUILDING OR STRUCTURE BELOW GRADE SHALL HAVE 1/4-INCH DRAIN HOLE AT BOTTOM OF THE BOX.

C. TERMINAL BLOCKS:
1. ALLEN-BRADLEY COMPANY, BULLETIN, MODEL 1492, GENERAL ELECTRIC COMPANY MODEL CR151K, OR EQUAL.
2. MATERIAL AND CONSTRUCTION: NEMA-RATED NYLON MODULAR TERMINAL BLOCKS, 600-VOLT RATED, CONTROL AND ALARM CIRCUIT TERMINALS SHALL BE SCREWED TYPE WITH PERMANENTLY AFFIXED NUMERIC IDENTIFIERS BESIDE EACH CONNECTION. POWER TERMINALS SHALL BE COPPER AND RATED FOR THE CIRCUIT AMPACITY.

D. MATERIALS & CONSTRUCTION - UNDERGROUND
1. PULLBOXES UNDERGROUND SHALL BE PRECAST POLYMER CONCRETE.
2. HUBBELL QUAZITE, OR APPROVED EQUAL.

SEALED FITTINGS

A. GENERAL:
1. MATERIAL: CAST GRAY IRON ALLOY, OR CAST MALLEABLE IRON, OR COPPER FREE ALUMINUM BODIES WITH ZINC ELECTROPLATE AND LACQUER OR ENAMEL FINISH.
2. AMPLE OPENING WITH THREADED CLOSURE FOR ACCESS TO CONDUIT HUB FOR MAKING DAM.
3. IN CORROSIVE LOCATIONS, FITTINGS SHALL INCLUDE FACTORY-APPLIED 40-MIL PVC COATING.
4. CONSTRUCT FITTING TO ALLOW 40 PERCENT CROSS-SECTIONAL FILL.
5. SEALING FIBER FOR FORMING THE DAM WITHIN THE HUB AND SEALING COMPOUND SHALL BE SUITABLE FOR USE WITH FITTINGS FURNISHED, AND SHALL BE PRODUCTS OF FITTING MANUFACTURER.
6. SEALING FITTING, FIBER, AND SEALING COMPOUND SHALL CONFORM TO UL 886.
7. CROUSE HINDS COMPANY, APPLETON ELECTRIC COMPANY, OR APPROVED EQUAL

DISCONNECT SWITCHES

A. SINGLE THROW, CIRCUIT DISCONNECT SWITCHES:
1. TYPE: FUSED OR UNFUSED, HORSEPOWER RATED, HEAVY-DUTY, SINGLE THROW, QUICK-MAKE, QUICK-BREAK MECHANISM, VISIBLE BLADES IN THE "OFF" POSITION AND SAFETY HANDLE.
2. RATING: VOLTAGE AND CURRENT RATINGS AND NUMBER OF POLES AS REQUIRED FOR MOTOR OR EQUIPMENT CIRCUITS BEING DISCONNECTED. SWITCHES SHALL BEAR A UL LABEL AND SHALL COMPLY WITH THE REQUIREMENTS OF UL 98, NEMA KS 1, AND NEMA 250.
3. SQUARE-D COMPANY, CUTLER-HAMMER, GENERAL ELECTRIC COMPANY, SIEMENS, OR APPROVED EQUAL.
4. ENCLOSURE: NEMA 4X.

MANUAL TRANSFER SWITCH

A. DOUBLE THROW, CIRCUIT DISCONNECT SWITCHES:
1. TYPE: UNFUSED, HEAVY-DUTY, QUICK-MAKE, QUICK-BREAK MECHANISM, VISIBLE BLADES IN THE "OFF" POSITION AND SAFETY HANDLE.
2. RATING: VOLTAGE AND CURRENT RATINGS AND NUMBER OF POLES AS REQUIRED FOR MOTOR OR EQUIPMENT CIRCUITS BEING DISCONNECTED. SWITCHES SHALL BEAR A UL LABEL AND SHALL COMPLY WITH THE REQUIREMENTS OF UL 98, NEMA KS 1, AND NEMA 250.
3. SQUARE-D COMPANY, CUTLER-HAMMER, GENERAL ELECTRIC COMPANY, SIEMENS, OR APPROVED EQUAL.
4. ENCLOSURE: NEMA 4X

GENERATOR RECEPTACLE

A. POWER RECEPTACLES:
1. 480V INTERLOCKED RECEPTACLE WITH ENCLOSED SAFETY SWITCH SERVICE OUTLET. PROVIDE SERVICE OUTLETS, QUANTITY AS SHOWN OR INDICATED, FOR PORTABLE EQUIPMENT.
2. MATERIAL: COPPER-FREE ALUMINUM ENCLOSURES WITH OPERATING HANDLE NEMA 4, WITH GASKETED, HINGED DOOR.
3. SWITCH: HEAVY DUTY, THREE-POLE, WITH VISIBLE BLADES, QUICK MAKE-A-BREAK MECHANISM WITH REINFORCED, POSITIVE-PRESSURE-TYPE BLADE AND FUSE CLIPS. SWITCH SHALL BE MECHANICALLY INTERLOCKED WITH RECEPTACLE. SWITCH CANNOT BE CLOSED UNTIL PLUG IS FULLY INSERTED AND PLUG CANNOT BE WITHDRAWN OR INSERTED UNLESS SWITCH IS OPEN.
4. RECEPTACLE: SINGLE GROUND RECEPTACLE, THREE WIRE, FOUR-POLE, 600-VOLT. PROVIDE MATCHING PLUGS
5. APPLETON, TYPE WSR, AND TYPE APS PLUGS BY CROUSE-HINDS, OR APPROVED EQUAL.
6. ENCLOSURE: NEMA 4X.

LOW VOLTAGE RECEPTACLES

A. GROUND FAULT INTERRUPTING RECEPTACLES:
1. DUPLEX GROUNDING RECEPTACLE, TWO-POLE, THREE-WIRE, NEMA 5-20R CONFIGURATION, 125-VOLT AC, 20 AMPERES, GRAY COLOR WITH GROUND FAULT CIRCUIT INTERRUPTING (GFCI) PROTECTION.
2. GROUND FAULT INTERRUPTING RECEPTACLES SHALL COMPLY WITH UL 943.
3. PROVIDE TYPE 302 STAINLESS STEEL COVER-PLATE CONFORMING TO UL 514D. PROVIDE WEATHERPROOF-WHILE-IN-USE COVER WHERE SHOWN ON THE DRAWINGS AS "WP" OR "WPU", AND PROVIDE WHERE LOCATED IN WET OR CORROSIVE LOCATION.
4. GFR53625GY BY HUBBELL, INC., 2091-GRY BY PASS & SEYMOUR., OR EQUAL.
5. WEATHER-RESISTANT GROUND FAULT INTERRUPTING RECEPTACLES: 2095TRWRGRY BY PASS & SEYMOUR, OR EQUAL.

PANELBOARD

A. GENERAL
1. RATING: VOLTAGE RATING, CURRENT RATING, NUMBER OF PHASES, NUMBER OF WIRES AND NUMBER OF POLES AS SHOWN OR INDICATED ON THE DRAWINGS.
2. CIRCUIT BREAKERS: MOLDED CASE, BOLT_IN THERMAL MAGNETIC TYPE WITH NUMBER OF POLES AND TRIP RATINGS AS SHOWN OR INDICATED. WHERE INDICATED ON THE DRAWINGS, CIRCUIT BREAKERS SHALL BE GROUND FAULT CIRCUIT INTERRUPTING TYPE EQUIPPED WITH SOLID STATE SENSING AND FIVE-MILLIAMP SENSITIVITY.
3. CIRCUIT BREAKERS FOR 480-VOLT PANELBOARDS SHALL HAVE MINIMUM INTERRUPTING RATING OF 64,000 AMPERE RMS SYMMETRICAL, UNLESS OTHERWISE INDICATED ON THE DRAWINGS. CIRCUIT BREAKERS FOR OTHER PANELBOARDS SHALL HAVE MINIMUM INTERRUPTING RATING OF 22,000 AMPERE RMS SYMMETRICAL, UNLESS OTHERWISE INDICATED ON THE DRAWINGS.
4. BUS BARS: BUS BARS SHALL BE 98 PERCENT CONDUCTIVITY COPPER. FOUR-WIRE PANELBOARDS SHALL HAVE SOLID NEUTRAL BAR. EACH PANEL SHALL HAVE GROUND BUS BAR.
5. MAIN: PANELBOARDS SHALL HAVE MAIN CIRCUIT BREAKER, UNLESS THE DRAWINGS SPECIFICALLY INDICATE MAIN LUGS ONLY.
6. CONNECT BRANCH CIRCUIT BREAKERS FOR SEQUENCE PHASING.
7. ENCLOSURES: PANEL ENCLOSURES SHALL BE NEMA 4X
8. CONSTRUCTION: CODE-GRADE STEEL, AMPLE GUTTER SPACE, FLUSH DOOR, FLUSH SNAP LATCH AND LOCK. PANELBOARDS SHALL COMPLY WITH NEMA PB 1 AND UL 67.
9. TRIM: SURFACE
10. DIRECTORY: TYPED OR COMPUTER-PRINTED CARD, WITH TRANSPARENT PROTECTIVE COVER IN FRAME ON BACK OF DOOR GIVING CIRCUIT NUMBERS AND AREA OR EQUIPMENT SERVED.
11. IDENTIFICATION: IDENTIFICATION SHALL INDICATE PANEL NUMBER AND VOLTAGE.
12. PROVIDE SURGE PROTECTION DEVICE IF INDICATED ON THE DRAWING.

B. INTEGRATED PANEL BOARD AND TRANSFORMER
1. UNIT SHALL CONSIST OF ENCAPSULATED DRY-TYPE TRANSFORMER, PRIMARY, AND SECONDARY MAIN CIRCUIT BREAKERS, AND SECONDARY PANEL BOARD ALL IN ONE ENCLOSURE.
2. TRANSFORMER RATING: KVA, PRIMARY VOLTAGE, SECONDARY VOLTAGE, FREQUENCY, AND NUMBER OF PHASES SHALL BE AS SHOWN OR INDICATED ON THE DRAWINGS.
3. BRANCH CIRCUITS: MOLDED CASE CIRCUIT BREAKERS, PLUG-IN THERMAL MAGNETIC TYPE WITH NUMBER OF POLES AND TRIP RATINGS AS SOWN OR INDICATED ON THE DRAWINGS.
4. MINI-POWER ZONE BY SQUARE D, MINI-POWER CENTER BY EATON, PANEL TRAN BY ACME ELECTRIC CORPORATION, OR EQUAL.

WISCONSIN BENJAMIN VERBURG 31794 WAUWATOSA WI PROFESSIONAL ENGINEER

NO.	DATE	ISSUED FOR	BY
0	10/30/18	DRAFT DESIGN PACKAGE FOR REVIEW	EE

ARCADIS
LEGAL ENTITY:
ARCADIS U.S., Inc.
ARCHITECTURAL AND
ENGINEERING SERVICES, INC.
COPYRIGHT: 2015

CONSULTANTS

SEALS

DATE: 10/30/18
PROJECT NO: WI001605.0001
FILE NAME: DRAFT-6_G7-SPECIFICATIONS (SHEET 5 OF 6)
DESIGNED: BV
DRAWN: EE
CHECKED BY: MC

2700 INDUSTRIAL PARKWAY SOUTH
MARINETTE, WISCONSIN 54143
215-362-0700
ANSUL FTC SITE
DITCH INTERIM ACTION DESIGN
ARCADIS PROJ. NO. WI001605.0001

SHEET TITLE
SPECIFICATIONS (SHEET 4 OF 5)

SCALE:
G6
SHEET ___ OF 1

User:EBERT Spec:AUS-NCSMOD File:G:\APROJ\ECTITYCOW\001605\CADD\DITCH INTERIM ACTION\DITCH A ONLY PACKAGE\DRAFT-6_G7-SPECIFICATIONS (SHEET 5 OF 6).DWG Scale:1:1 SavedDate:10/24/2018 Time:09:04 Plot Date: Ebert, Liz; 10/30/2018; 09:47 Layout:G6

SITE CLEARING AND GRUBBING

PART 1 - GENERAL

1.2 DESCRIPTION

A. SCOPE:

1. CONTRACTOR SHALL CLEAR AND GRUB THE SITE OF ANY WOODY DEBRIS WITHIN THE AREA OF WORK PRIOR TO THE COMMENCEMENT OF CONSTRUCTION. REMOVAL OF TREES GREATER THAN OR EQUAL TO 3 INCHES DIAMETER AT BREAST HEIGHT SHALL OCCUR BETWEEN OCTOBER 1 AND MARCH 31 AND WILL BE AVOIDED.
2. CONTRACTOR SHALL PROVIDE ALL LABOR, MATERIALS, EQUIPMENT AND INCIDENTALS REQUIRED TO COMPLETE THE NECESSARY CLEARING AND GRUBBING WORK.

B. RELATED DOCUMENTS:

1. DRAWINGS.

PART 2 - PRODUCTS

2.1 GENERAL

A. IMPORTED TOPSOIL SHALL MEET THE REQUIREMENTS OF OHIO DOT, ITEM 653 OR EQUAL.

PART 3 - EXECUTION

3.1 GENERAL

A. ANY CLEARING DEBRIS SHALL BE DISPOSED OF OFF-SITE AT A PERMITTED FACILITY. NO ON-SITE BURNING OF CLEARING DEBRIS WILL BE ALLOWED.

B. ANY WOODY DEBRIS ENCOUNTERED ON THE DAM EMBANKMENT SHALL ALSO HAVE ITS STUMP AND ROOTS REMOVED TO 2 INCHES OR LARGER. EXCAVATION RESULTING FROM THE REMOVAL OF ANY STUMPS AND/OR ROOTS SHALL BE BACKFILLED WITH MATERIAL MEETING THE CHARACTERISTICS OF THE EXISTING DAM EMBANKMENT MATERIAL. BACKFILL SHALL BE PLACED IN 12-INCH LIFTS AND COMPACTED TO A MINIMUM OF 95% OF STANDARD PROCTOR.

C. CONTRACTOR SHALL STRIP, AND STOCKPILE TOPSOIL FORM THE AREA OF DISTURBANCE FOR REUSE UPON FINAL SITE RESTORATION.

D. CONTRACTOR SHALL PROVIDE ADDITIONAL TOPSOIL AS NECESSARY TO PROVIDE 6 INCHES (MINIMUM) OF TOPSOIL AT ALL DISTURBED AREA UNLESS OTHERWISE NOTED TO RECEIVE OTHER SURFACE TREATMENT.

CHAIN LINK FENCING

PART 1 - GENERAL

1.1 DESCRIPTION

A. SCOPE:

1. CONTRACTOR SHALL PROVIDE ALL LABOR, MATERIALS, TOOLS, EQUIPMENT AND INCIDENTALS AS SHOWN, SPECIFIED, AND REQUIRED TO FURNISH AND INSTALL FENCING.
2. EXTENT OF FENCING IS SHOWN OR INDICATED.

B. RELATED DOCUMENTS:

1. SEE INDEX TO DRAWINGS ON SHEET G1

1.2 REFERENCES

A. STANDARDS REFERENCED IN THIS SECTION ARE:

1. ASTM A53, SPECIFICATION FOR PIPE, STEEL, BLACK AND HOT-DIPPED, ZINC-COATED, WELDED AND SEAMLESS
2. ASTM A90/A90M, TEST METHOD FOR WEIGHT [MASS] OF COATING ON IRON AND STEEL ARTICLES WITH ZINC OR ZINC-ALLOY COATINGS.
3. ASTM A123, SPECIFICATION FOR ZINC (HOT-DIP GALVANIZED) COATINGS ON IRON AND STEEL PRODUCTS
4. ASTM A153/A153M, SPECIFICATION FOR ZINC COATING (HOT-DIP) ON IRON AND STEEL HARDWARE.
5. ASTM A428/A428M, TEST METHOD FOR WEIGHT [MASS] OF COATING ON ALUMINUM-COATED IRON OR STEEL ARTICLES.
6. ASTM A491, SPECIFICATION FOR ALUMINUM-COATED STEEL CHAIN-LINK FENCE FABRIC.
7. ASTM A780, PRACTICE FOR REPAIR OF DAMAGED AND UNCOATED AREAS OF HOT-DIP GALVANIZED COATINGS.
8. ASTM A817, SPECIFICATION FOR METALLIC-COATED STEEL WIRE FOR CHAIN-LINK FENCE FABRIC.
9. ASTM A1011/A1011M, SPECIFICATION FOR STEEL, SHEET AND STRIP, HOT-ROLLED, CARBON, STRUCTURAL, HIGH-STRENGTH LOW-ALLOY, HIGH-STRENGTH LOW-ALLOY WITH IMPROVED FORMABILITY, AND ULTRA-HIGH STRENGTH.
10. ASTM B6, SPECIFICATION FOR ZINC.
11. ASTM F552, TERMINOLOGY RELATING TO CHAIN LINK FENCING.
12. ASTM F567, PRACTICE FOR INSTALLATION OF CHAIN-LINK FENCE.
13. ASTM F626, SPECIFICATION FOR FENCE FITTINGS.
14. ASTM A653, SPECIFICATION FOR STEEL SHEET, ZINC-COATED (GALVANIZED) OR ZINC-IRON ALLOY-COATED (GALVANNEALED) BY THE HOT-DIP PROCESS
15. ASTM F1043, SPECIFICATION FOR STRENGTH AND PROTECTIVE COATINGS ON METAL INDUSTRIAL CHAIN LINK FENCE FRAMEWORK.
16. ASTM F1083, SPECIFICATION FOR PIPE, STEEL, HOT-DIPPED ZINC-COATED (GALVANIZED) WELDED, FOR FENCE STRUCTURES.
17. CLFMI CLF 2445, PRODUCT MANUAL.
18. CLFMI, STEP-BY-STEP INSTALLATION GUIDE.

1.3 SUBMITTALS

A. ACTION SUBMITTALS: SUBMIT THE FOLLOWING:

1. SHOP DRAWINGS:
   a. DRAWINGS AT SCALE OF 1/4-INCH EQUAL TO ONE FOOT OF TYPICAL FENCE ASSEMBLY, IDENTIFYING ALL MATERIALS, DIMENSIONS, SIZES, WEIGHTS, AND FINISHES OF RAILS, POSTS, BRACES, SUPPORTS AND OTHER FENCING COMPONENTS. SHOW FENCE HEIGHTS, AND LOCATIONS OF GATES. SHOW GATE SWING, OR OTHER OPERATION, HARDWARE, AND ACCESSORIES. INCLUDE PLANS, ELEVATIONS, AND SECTIONS, WITH REQUIRED INSTALLATION AND OPERATING CLEARANCES, AND DETAILS OF POST ANCHORAGE, ATTACHMENTS, AND BRACING.
2. PRODUCT DATA:
   a. COPIES OF MANUFACTURER'S TECHNICAL PRODUCT INFORMATION, AND SPECIFICATIONS FOR ALL FENCING COMPONENTS, INCLUDING AUXILIARY SYSTEM COMPONENTS.
   b. DATA SUBSTANTIATING THAT MATERIALS PROPOSED COMPLY WITH THE FOLLOWING:
      1) WEIGHT OF ALUMINUM COATING ON WIRE FABRICATIONS, IN COMPLIANCE WITH ASTM A428.
      2) WEIGHT OF ZINC COATING ON PIPE FABRICATIONS, IN COMPLIANCE WITH ASTM A90.

1.4 DELIVERY, STORAGE, AND HANDLING

A. DELIVERY OF MATERIALS:

1. PACKAGING AND MARKING: COMPLY WITH CLFMI CLF 2445.
2. DELIVER MATERIALS IN MANUFACTURER'S ORIGINAL, UNOPENED PACKAGING WITH ALL FACTORY-APPLIED TAGS, LABELS AND OTHER IDENTIFYING INFORMATION INTACT, LEGIBLE AND ACCURATELY REPRESENTING MATERIAL ON APPROVED SUBMITTALS.

B. STORAGE OF MATERIALS:

1. STORE ALL MATERIALS UNDER WEATHERPROOF COVER, OFF THE GROUND AND AWAY FROM OTHER CONSTRUCTION ACTIVITIES.
2. DO NOT STORE MATERIAL IN A MANNER THAT WOULD CREATE A HUMIDITY CHAMBER. PROVIDE FOR FREE MOVEMENT OF AIR UNDER PROTECTIVE COVER AND BETWEEN COMPONENTS OF THE FENCING.

C. HANDLING OF MATERIALS:

1. HANDLE MATERIAL IN MANNER THAT IS IN COMPLIANCE WITH MANUFACTURER'S RECOMMENDATIONS AND THAT AVOIDS DAMAGING COATINGS.

PART 2 - PRODUCTS

2.1 MATERIALS

A. GENERAL:

1. TUBE SIZES SPECIFIED ARE NOMINAL OUTSIDE DIMENSION.
2. ROLL-FORMED SECTION SIZES ARE NOMINAL OUTSIDE DIMENSIONS.
3. WIRE GAGES SHALL CONFORM TO AMERICAN STEEL AND WIRE COMPANY GAGE.
4. HEAT-FORM ARCS AND CHORDS BEFORE APPLYING PROTECTIVE COATINGS TO METAL.
5. SIZES SPECIFIED ARE GIVEN FOR UNCOATED METAL. PROTECTIVE COATINGS ARE IN ADDITION TO SPECIFIED METAL DIMENSIONS, GAGES, AND SIZES.
6. PROVIDE WEIGHTS OF ZINC AND ALUMINUM COATINGS ON WIRE AND PIPE FABRICATIONS IN ACCORDANCE WITH CLFMI CLF 2445.
7. PROVIDE THICKNESS OF PVC COATING ON WIRE AND PIPE FABRICATIONS IN ACCORDANCE WITH CLFMI CLF 2445.

B. CHAIN-LINK FENCE FABRIC:

1. ONE-PIECE FABRIC WIDTHS, FOR FENCING 12 FEET AND LESS IN HEIGHT, COMPLYING WITH CLFMI CLF 2445.
2. WIRE MESH SHALL BE WOVEN THROUGHOUT IN FORM OF APPROXIMATELY-UNIFORM SQUARE MESH WITH PARALLEL SIDES AND HORIZONTAL AND VERTICAL DIAGONALS OF APPROXIMATELY-UNIFORM DIMENSIONS, OF SIZE AND GAGE SPECIFIED AND IN COMPLIANCE WITH ASTM A817, TYPE 1, COLD-DRAWN CARBON STEEL WIRE WITH MINIMUM BREAKING STRENGTH OF 2,170 POUNDS AND COATED WITH ALUMINIZED FINISH, AS SPECIFIED. FABRIC SHALL BE AS RECOMMENDED BY CLFMI FOR HEAVY INDUSTRIAL USAGE.
3. PROVIDE FENCE FABRIC IMPRINTED WITH MANUFACTURER'S TRADE NAME, COUNTRY OF ORIGIN, CORE WIRE GAGE, AND FINISHED OUTSIDE DIAMETER GAGE.
4. PROVIDE FABRIC KNUCKLED TO ELIMINATE EXPOSURE OF SHARP EDGES.
5. FABRIC GAGE: PROVIDE THE FOLLOWING:
   a. NO. 9-GAGE WIRES.
   b. MESH SIZE: PROVIDE THE FOLLOWING: TWO-INCH MESH.

2.2 FRAMEWORK

A. GENERAL: THE FOLLOWING TABLE PRESENTS ACTUAL OD AND EQUIVALENT NOMINAL NPS SIZE AND TRADE SIZE OF ROUND MEMBERS:

ACTUAL OD (INCHES)	NPS SIZE (INCHES)	TRADE SIZE (INCHES)
1.315	1.0	1-3/8
1.660	1.3	1-5/8
1.900	1.5	2
2.375	2.0	2-1/2
2.875	2.5	3
3.500	3.0	3-1/2
4.000	3.5	4
6.625	6.0	6-5/8
8.625	8.0	8-5/8

B. PIPE SHALL BE COMMERCIAL GRADE, PLAIN-END STEEL PIPE WITH STANDARD-WEIGHT WALLS. STEEL STRIP USED FOR MANUFACTURE OF PIPE SHALL COMPLY WITH ASTM F1083, SCHEDULE 40 PIPE WITH MINIMUM YIELD STRENGTH OF 25,000 PSI AND PROTECTED WITH ZINC, AS SPECIFIED.

C. FITTINGS: COMPLY WITH ASTM F626.

D. END, CORNER, AND PULL POSTS: PROVIDE END, CORNER, AND PULL POSTS OF FOLLOWING MINIMUM SIZES:

1. UP TO SIX FEET FABRIC HEIGHT:

E. 2.375 INCHES OD PIPE WEIGHING 3.65 POUNDS PER LINEAR FOOT.

F. LINE POSTS: PROVIDE LINE POSTS OF FOLLOWING MINIMUM SIZES AND WEIGHTS:

1. UP TO SIX FEET FABRIC HEIGHT:

G. 1.90 INCHES OD PIPE WEIGHING 2.72 POUNDS PER LINEAR FOOT.

H. TOP RAIL: PROVIDE TOP RAILS, UNLESS OTHERWISE SHOWN OR INDICATED, CONFORMING TO THE FOLLOWING:

1. 1.900 INCH OD PIPE WEIGHING 2.72 POUNDS PER LINEAR FOOT.
2. PROVIDE IN MANUFACTURER'S LONGEST LENGTHS, WITH EXPANSION-TYPE COUPLING 0.051-INCH THICK RAIL SLEEVES, APPROXIMATELY SEVEN INCHES LONG, FOR EACH JOINT.
3. PROVIDE MEANS FOR ATTACHING TOP RAIL SECURELY TO EACH GATE, CORNER, PULL, AND END POST.
   CENTER RAILS BETWEEN LINE POSTS: PROVIDE CENTER RAILS BETWEEN LINE POSTS, WHERE SHOWN, CONSISTING OF 1.660-INCH OD PIPE WEIGHING 2.27 POUNDS PER LINEAR FOOT.

I. ROLL-FORMED STEEL: PROVIDE ROLLED STEEL SHAPES PRODUCED FROM STRUCTURAL-QUALITY STEEL CONFORMING TO ASTM A1011, GRADE 45, WITH MINIMUM YIELD STRENGTH OF 45,000 POUNDS PSI. PROTECTIVE COATING SYSTEM SHALL CONFORM TO ASTM F1043, AS SPECIFIED.

J. POST BRACE ASSEMBLY: PROVIDE BRACING ASSEMBLIES AT END AND GATE POSTS, AND AT BOTH SIDES OF CORNER AND PULL POSTS, WITH HORIZONTAL BRACE LOCATED AT MID_HEIGHT OF FABRIC.

1. USE 1.900-INCH OD PIPE WEIGHING 2.72 POUNDS PER LINEAR FOOT FOR HORIZONTAL BRACE AND 3/8-INCH DIAMETER ROD WITH TURNBUCKLE FOR DIAGONAL TRUSS.

2.3 AUXILIARY FENCING MATERIALS AND ACCESSORIES

A. WIRE TIES:

1. FOR TYING FABRIC TO LINE POSTS, USE NINE-GAGE, ALUMINUM ALLOY 1100-H4, PVC-COATED WIRE TIES TO MATCH FENCE FABRIC, SPACED 12 INCHES ON CENTERS.
2. FOR TYING FABRIC TO RAILS AND BRACES, USE NINE-GAGE, ALUMINUM ALLOY 1100-H4, PVC-COATED WIRE TIES TO MATCH FENCE FABRIC, SPACED TWO FEET ON CENTERS.
3. FOR TYING FABRIC TO TENSION WIRE, USE 11-GAGE, ALUMINUM ALLOY 1100-H4, PVC-COATED WIRE HOG RING TIES TO MATCH FENCE FABRIC, SPACED TWO FEET ON CENTERS.

B. TENSION WIRE: PROVIDE TENSION WIRE CONSISTING OF ALUMINIZED, SEVEN-GAGE, COILED SPRING STEEL WIRE COATED WITH 0.40-OUNCES OF ALUMINUM PER SQUARE FOOT OF WIRE SURFACE, MINIMUM, IN COMPLIANCE WITH ASTM F1664.

1. LOCATE AT BOTTOM OF FABRIC ONLY.

C. POST CAPS: PRESSED STEEL, WROUGHT IRON, OR CAST ALUMINUM ALLOY, DESIGNED AS WEATHER-TIGHT CLOSURE CAP, FOR TUBULAR POSTS. PROVIDE ONE CAP FOR EACH POST UNLESS EQUAL PROTECTION IS AFFORDED BY COMBINATION POST-TOP CAP AND BARBED WIRE SUPPORTING ARM, WHERE BARBED WIRE IS REQUIRED.

1. PROVIDE CAPS WITH OPENINGS TO ALLOW THROUGH-PASSAGE OF TOP RAIL.
2. PROVIDE CONE-TYPE CAPS FOR TERMINAL POSTS AND LOOP-TYPE CAPS FOR LINE POSTS.

D. STRETCHER BARS: ONE-PIECE LENGTHS EQUAL TO FULL HEIGHT OF FABRIC, WITH MINIMUM CROSS_SECTION OF 3/16-INCH BY 3/4-INCH. PROVIDE ONE STRETCHER BAR FOR EACH GATE AND END-POST, AND TWO FOR EACH CORNER- AND PULL-POST, EXCEPT WHERE FABRIC IS INTEGRALLY WOVEN INTO THE POST.

E. STRETCHER BAR BANDS: PRESSED STEEL, GALVANIZED, 0.078-INCH TO 0.108-INCH THICK DEPENDING ON POST DIAMETER, SPACED NOT GREATER THAN 15 INCHES ON CENTERS TO SECURE STRETCHER BARS TO END-, CORNER-, PULL-, AND GATE-POSTS.

1. BANDS MAY ALSO BE USED WITH SPECIAL FITTINGS FOR SECURING RAILS TO END-, CORNER-, PULL-, AND GATE-POSTS.

F. TRUSS RODS: STEEL RODS, 3/8-INCH DIAMETER, MERCHANT QUALITY WITH TURNBUCKLE.

G. MOUNTING PLATES: PROVIDE MOUNTING PLATES THAT ARE WELDED TO THE POSTS AS FURTHER SHOWN ON THE DRAWINGS. PLATES AND COMPLETED WELDS SHALL BE GALVANIZED ALONG WITH THE POSTS.

4. FINISHING

H. CHAIN-LINK FENCE FABRIC:

1. ALUMINIZED FINISH WITH NOT LESS THAN 0.40 OUNCES ALUMINUM PER SQUARE FOOT, COMPLYING WITH ASTM A491, CLASS II.

I. FRAMEWORK AND APPURTENANCES: PROVIDE THE FOLLOWING FINISHES FOR STEEL FRAMEWORK, AUXILIARY SYSTEM COMPONENTS, AND MISCELLANEOUS ACCESSORIES:

1. GALVANIZING: ZINC FOR GALVANIZING SHALL BE OF HIGH GRADE OR SPECIAL HIGH GRADE CONFORMING TO ASTM B6 WITH MAXIMUM ALUMINUM CONTENT OF 0.01 PERCENT. GALVANIZE METAL USING HOT-DIP PROCESS IN ACCORDANCE WITH THE FOLLOWING:
   a. STRUCTURAL IRON AND STEEL SHAPES: ASTM A123
   b. ROLLED-FORM SHEET STEEL: ASTM A653
   c. HARDWARE AND ACCESSORIES: ASTM A153
   d. FITTINGS: ASTM F626
   e. PIPE: ASTM A53
2. PROVIDE MINIMUM WEIGHTS OF ZINC AS FOLLOWS:
   a. PIPE: 1.8-OUNCES OF ZINC PER SQUARE FOOT. APPLY TYPE A COATING BOTH INSIDE AND OUTSIDE ACCORDING TO ASTM F1043, AS DETERMINED BY ASTM A90.
   b. ROLLED-FORM SHEET STEEL: 4.0-OUNCES OF ZINC PER SQUARE FOOT OF SURFACE AREA.
   c. HARDWARE AND ACCESSORIES: ZINC WEIGHTS IN COMPLIANCE WITH TABLE 1 OF ASTM A153.

J. WELDED JOINTS:

1. REPAIR ZINC COATINGS AT WELDED JOINTS BY APPLYING ZINC-RICH PAINT THAT COMPLIES WITH ASTM A780.

2.5 SOURCE QUALITY CONTROL

A. FABRICATION TOLERANCES:

1. FABRIC, POSTS, RAILS, AND OTHER SUPPORTS SHALL BE STRAIGHT OR UNIFORMLY CURVED TO PROVIDE THE PROFILES SHOWN, TO DIMENSIONAL TOLERANCE OF 1/16-INCH IN 10 FEET WITHOUT WARP OR RACK IN THE FINISHED WORK.

PART 3 - EXECUTION

3.1 INSPECTION

A. EXAMINE CONDITIONS UNDER WHICH THE WORK WILL BE ERECTED AND NOTIFY ENGINEER IN WRITING OF CONDITIONS DETRIMENTAL TO PROPER AND TIMELY COMPLETION OF THE WORK. DO NOT PROCEED WITH THE WORK UNTIL UNSATISFACTORY CONDITIONS ARE CORRECTED.

3.2 ERECTION

A. COMPLY WITH CLFMI STEP-BY-STEP INSTALLATION GUIDE AND ASTM F567. DO NOT BEGIN INSTALLATION AND ERECTION OF FENCING UNTIL FINAL GRADING IS COMPLETED.

B. POSTS AND RAILS:

1. LINE POSTS: INSTALL POSTS TO CONCRETE STRUCTURE SPACED NOT MORE THAN TEN FEET ON CENTERS. PROVIDE CAPS ON TOP OF EACH POST TO EXCLUDE MOISTURE AND TO RECEIVE TOP RAIL.
2. TOP RAILS: RUN RAIL CONTINUOUSLY THROUGH POST CAPS OR EXTENSION ARMS, BENDING TO RADIUS FOR CURVED RUNS. PROVIDE EXPANSION COUPLINGS AS RECOMMENDED BY FENCING MANUFACTURER TO FORM CONTINUOUS RAIL BETWEEN TERMINAL POSTS.
3. BRACE ASSEMBLIES: INSTALL BRACES SO POSTS ARE PLUMB WHEN DIAGONAL ROD ARE UNDER PROPER TENSION. INSTALL BRACE ASSEMBLIES AT END-POSTS AND AT BOTH SIDES OF CORNER- AND PULL-POST PANELS. PANELS ADJACENT TO GATES SHALL HAVE INTERMEDIATE HORIZONTAL RAILS AND DIAGONAL BRACING. DIAGONAL BRACING SHALL RUN FROM CENTER OF FIRST LINE-POST TO BOTTOM OF TERMINAL-POST.

C. CHAIN-LINK FABRIC:

1. INSTALL FABRIC ON LAND SIDE OF FENCE, AND ANCHOR TO FRAMEWORK SO THAT FABRIC REMAINS IN TENSION AFTER PULLING FORCE IS RELEASED. FASTEN TO TERMINAL POSTS AND GATE POSTS WITH TENSION BARS THREADED THROUGH MESH AND SECURED WITH TENSION BANDS AT MAXIMUM INTERVALS OF 14 INCHES.
2. TIE TO LINE-POSTS, GATE FRAMES AND TOP AND BOTTOM RAILS WITH TIE WIRES SPACED AT MAXIMUM 12 INCHES ON POSTS AND TWO FEET ON RAILS.
3. CONNECT TENSION BARS TO POSTS AND FRAMES BY MEANS OF ADJUSTABLE BOLTS AND BANDS SPACED NOT MORE THAN 14 INCHES APART.
4. LEAVE APPROXIMATELY TWO INCHES BETWEEN FINISH GROUND SURFACE AND BOTTOM SELVAGE.
5. JOIN ROLL OF CHAIN-LINK FABRIC BY WEAVING A SINGLE PICKET INTO THE ENDS OF ROLL TO FORM CONTINUOUS MESH.

D. TENSION WIRE:

1. STRETCH TENSION WIRE TAUT AND FREE OF SAG, FROM END TO END OF EACH STRETCH OF FENCE AND POSITION AT A HEIGHT THAT WILL ENABLE THE WIRE TO BE FASTENED TO CHAIN-LINK FABRIC BY SECURING WITHIN THE TOP 12 INCHES OF CHAIN-LINK FABRIC.
2. FASTEN BOTTOM TENSION WIRE WITHIN BOTTOM SIX INCHES OF CHAIN-LINK FABRIC.
3. TIE TENSION WIRE TO EACH POST WITH NOT LESS THAN SIX-GAGE GALVANIZED WIRE.

E. STRETCHER BARS: THREAD THROUGH OR CLAMP TO FABRIC FOUR INCHES ON CENTERS, AND SECURE TO POSTS WITH METAL BANDS SPACED 15 INCHES ON CENTERS.

F. TIE WIRES: USE U_SHAPED WIRES CONFORMING TO DIAMETER OF PIPE. CLASP PIPE AND FABRIC FIRMLY WITH ENDS TWISTED AT LEAST TWO FULL TURNS. BEND ENDS OF WIRE TO MINIMIZE HAZARD TO PERSONS AND CLOTHING.

G. FASTENERS: INSTALL NUTS FOR TENSION BAND AND HARDWARE BOLTS ON SIDE OF FENCE OPPOSITE FABRIC SIDE. PEEN ENDS OF BOLTS OR SCORE THREADS TO PREVENT REMOVAL OF NUTS.

3.3 ADJUSTMENT AND CLEANING

A. REPAIR COATINGS DAMAGED IN THE SHOP OR AT THE SITE BY RECOATING WITH MANUFACTURER'S RECOMMENDED REPAIR COMPOUND, APPLIED IN ACCORDANCE WITH MANUFACTURER'S DIRECTIONS. REPAIR HOT-DIP GALVANIZED COATINGS IN ACCORDANCE WITH ASTM A780.

WALL SLEEVE AND SEAL SYSTEM:

PART 1 - GENERAL

1.1 DESCRIPTION

A. SCOPE:

1. PROVIDE FABRICATED CARBON STEEL WALL SLEEVE AND MECHANICAL SEAL SYSTEM AT LOCATIONS SHOWN.

B. RELATED DOCUMENTS

1. DRAWINGS

1.2 SUBMITTALS

A. ACTION SUBMITTALS: SUBMIT THE FOLLOWING:

1. PRODUCT DATA: MANUFACTURERS LITERATURE, ILLUSTRATIONS, SPECIFICATIONS, AND ENGINEERING DATA INCLUDING DIMENSIONS, MATERIALS, SIZE WEIGHT AND PERFORMANCE DATA.

PART 2 - PRODUCTS

2.1 WALL SLEEVE

A. WALL SLEEVE CONSTRUCTED OF 1/4-INCH CARBON STEEL WITH EPOXY COATING AS MANUFACTURED BY TRUMBULL INDUSTRIES, INC. OR EQUAL.
B. COORDINATE WALL SLEEVE SIZE BASED ON PIPE AND MECHANICAL SEAL SYSTEM REQUIREMENTS.

2.2 MECHANICAL SEAL

A. PROVIDE ENGINEERED MECHANICAL SEAL SYSTEM CONSISTING OF EPDM SEALANT UNITS THAT INTERLOCK AND EXPAND TO SEAL ANNULAR SPACE BETWEEN PIPE AND WALL SLEEVE. SYSTEM SHALL BE MANUFACTURERED BY GPT INDUSTRIES, LINK SEAL SYSTEM OR EQUAL.
B. COORDINATE MECHANICAL SEAL SYSTEM BASED ON PIPE AND WALL SLEEVE DIMENSIONS.

PART 3 - EXECUTION

3.1 INSTALLATION

A. INSTALL WALL SLEEVE IN ACCORDANCE WITH DETAILS AS SHOWN ON STRUCTURAL DRAWINGS.
B. INSTALL MECHANICAL SEAL SYSTEM PER MANUFACTURE'S INSTRUCTIONS.
C. INSTALL NON-SHRINK GROUT SEAL AS SHOWN ON THE DRAWINGS.

PRECAST MANHOLE

1. PRECAST CONCRETE SECTIONS: ASTM C478.
   A. BASE RISER SECTION WITH INTEGRAL FLOOR.
   B. VERTICAL CONCRETE RISER SECTIONS WITH RUBBER GASKET JOINTS.
   C. FLAT TOP SLAB DESIGNED TO WITHSTAND H-20 TRAFFIC LOAD.
   D. PROVIDE GRADE RINGS AS SHOWN WITH MINIMUM HEIGHT OF 4 INCHES AND MAXIMUM HEIGHT OF 15 INCHES.

2. RUBBER GASKET JOINTS: ASTM C443.

3. RESILIENT CONNECTORS: ASTM C923
   A. PROVIDE RESILIENT CONNECTORS FOR CONNECTING PIPES AS SHOWN.

4. MANHOLE STEPS: ASTM C478, REINFORCED POLYPROPYLENE.

5. CASTING: ASTM A48, CLASS 35B HEAVY DUTY, GRAY IRON, UNCOATED.
   EJ SERIES 1040 FRAME AND COVER WITH FACTORY INSTALLED GASKET SEAL.

RIGID CONDUITS

1. PVC-COATED RIGID STEEL CONDUITS, ELBOWS, COUPLINGS, FITTINGS AND OUTLET BODIES:
   A. MATERIAL:
      1) RIGID, HEAVY-WALL, MILD STEEL, HOT-DIP GALVANIZED, SMOOTH URETHANE INTERIOR COATING, TAPERED THREADS, CAREFULLY REAMED ENDS, 3/4-INCH NPS MINIMUM SIZE WITH FACTORY EXTERIOR COATING OF 40-MIL THICK PVC.
   B. COLOR:
      1) COLOR OF COATING SHALL BE THE SAME ON ALL CONDUIT AND FITTINGS.
   C. MANUFACTURERS:
      1) ROBROY INDUSTRIES
      2) PERMA-COTE INDUSTRIES
      3) OR APPROVED EQUAL

2. SEALING BUSHING
   A. FOR CONDUITS PASSING THROUGH EXTERIOR MASONRY BLOCK WALLS OR THROUGH CORE - DRILLED HOLES IN EXTERIOR SUBSURFACE WALLS, EXTERIOR CONCRETE WALLS, FLOOR SLABS, ROOF SLABS, AND FOR CONDUIT PASSING THROUGH INTERIOR CONCRETE WALLS OR FLOORS AND INTERIOR MASONRY BLOCK WALLS.
   B. CSMI SEALING BUSHING AT THE INSIDE OF THE STRUCTURE AND TYPE CSMC SEALING BUSHING AT THE OUTSIDE OF THE STRUCTURE BY 0-Z/GEDNEY, OR APPROVED EQUAL.

FLEXIBLE CONDUIT AND FITTINGS

1. FLEXIBLE CONDUIT (NON-HAZARDOUS CLASS 1, DIVISION 2 HAZARDOUS AREAS)
   A. MATERIAL:
      1) FLEXIBLE GALVANIZED STEEL CORE WITH SMOOTH, ABRASION-RESISTANT, LIQUID-TIGHT, POLYVINYL CHLORIDE COVER. CONTINUOUS COPPER GROUND BUILT IN FOR SIZES 3/4-INCH THROUGH 1.25-INCH. MATERIAL SHALL BE UL LISTED.
   B. MANUFACTURERS:
      1) ANACONDA SEALTITE TYPE UA BY ANAMET ELECTRICAL, INC.
      2) LIQUATITE TYPE L.A. BY ELECTRIC-FLEX COMPANY
      3) OR APPROVED EQUAL.

2. PVC-COATED CONDUIT FITTINGS
   A. MATERIAL AND CONSTRUCTION:
      1) MALLEABLE IRON WITH STANDARD FINISH AND 40-MIL PVC EXTERIOR COATING. FITTINGS SHALL ADAPT THE CONDUIT TO STANDARD THREADED CONNECTIONS AND SHALL HAVE AN INSIDE DIAMETER NOT LESS THAN THAT OF THE CORRESPONDING STANDARD CONDUIT SIZE.
      2) MANUFACTURERS:
      1) ROBROY INDUSTRIES
      2) PERMACOTE INDUSTRIES
      3) OCAL, INC
      4) OR APPROVED EQUAL.

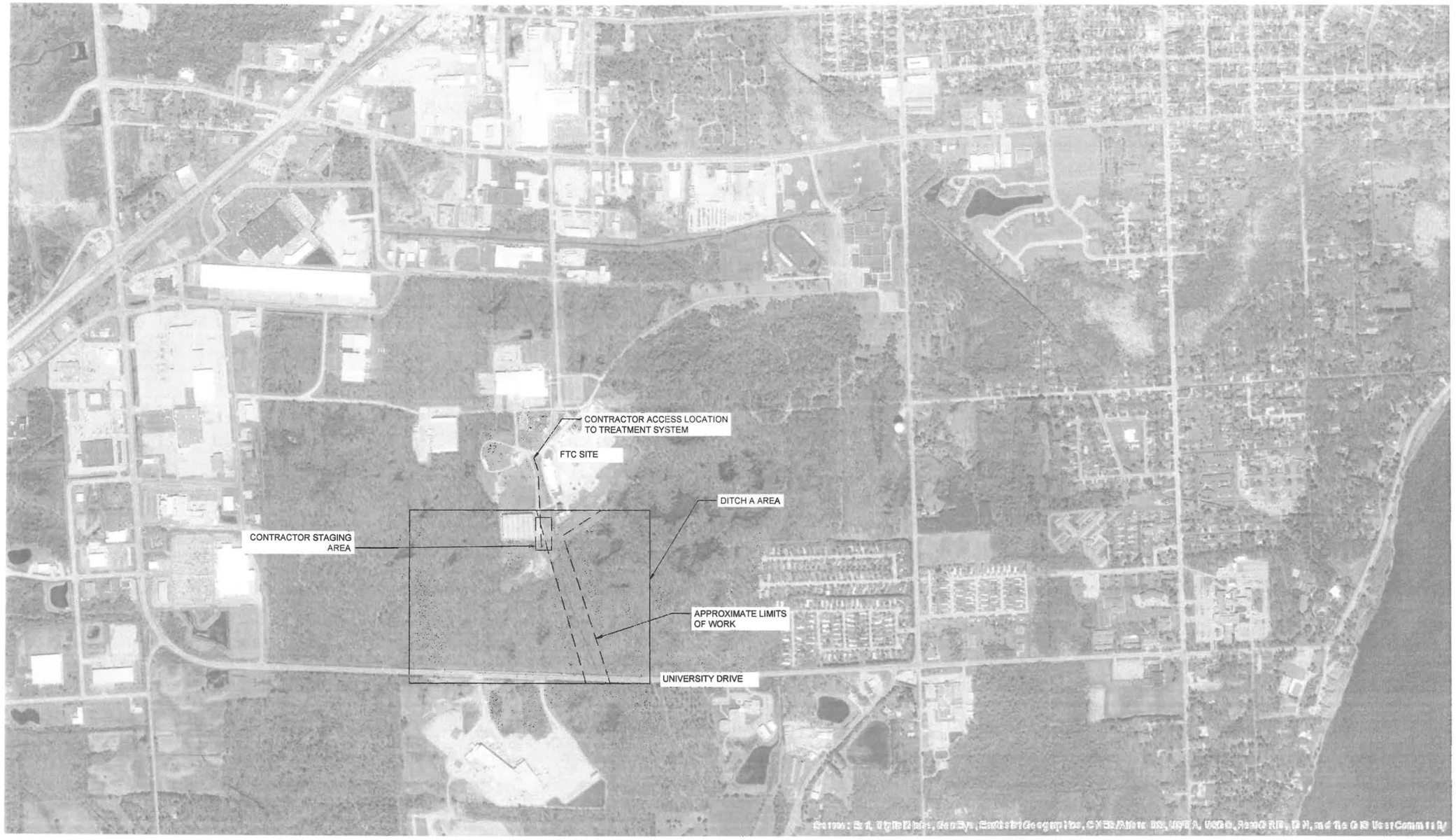

0 500 FEET

N

ARCADIS

LEGAL ENTITY:
ARCADIS U.S., Inc.
ARCHITECTURAL AND
ENGINEERING SERVICES, INC.

COPYRIGHT: 2015

CONSULTANTS

NO.	DATE	ISSUED FOR	BY
0	10/30/18	DRAFT DESIGN PACKAGE FOR REVIEW	EE

SEALS: WISCONSIN BENJAMIN J. VERBURG 31794 WAUWATOSA, WI PROFESSIONAL ENGINEER

DATE: 10/30/18
PROJECT NO.: WI001605.0001
FILE NAME: DRAFT--8_OVERALLSITEPLAN
DESIGNED BY: BV
DRAWN BY: CE
CHECKED BY: MA

2700 INDUSTRIAL PARKWAY SOUTH
MARINETTE, WISCONSIN 54143
215-362-0700
ANSUL FTC SITE

DITCH INTERIM ACTION DESIGN

ARCADIS PROJ. NO. WI001605.0001

SHEET TITLE

OVERALL SITE PLAN

SCALE:

C1

SHEET ___ OF 1

User:EBBERT Spec:AUS-NCSMOD File:G:\APPROJECT\TYCO\WI001605\CAD\DITCH INTERIM ACTION\DITCH A ONLY PACKAGE\DRAFT-8_OVERALLSITEPLAN.DWG Scale:1:1 SavedDate:10/29/2018 Time:17:22 Plot Date: Ebert, Liz; 10/30/2018; 09:57 ; Layout:C1

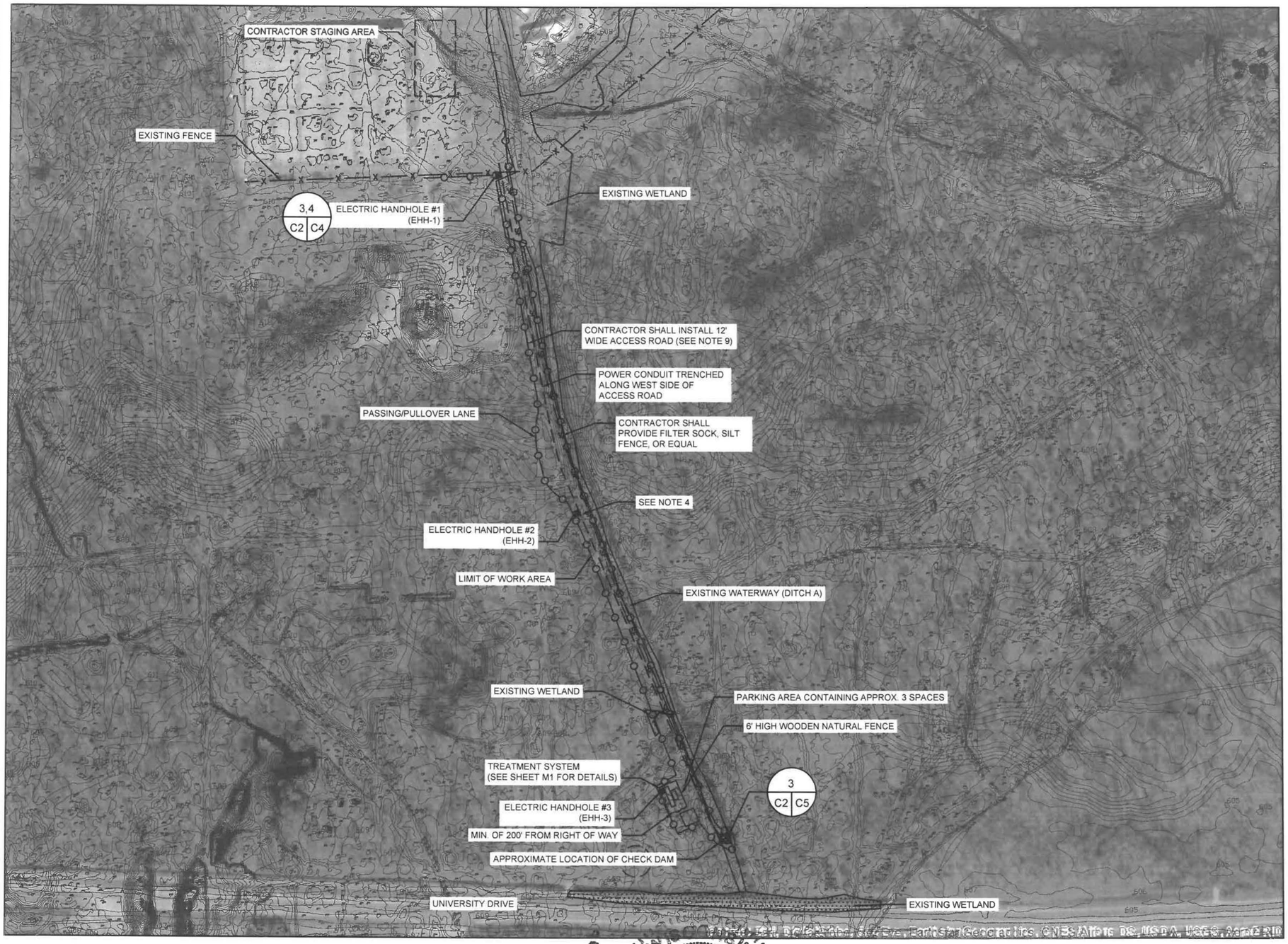

NOTES:

1. AERIAL IMAGE, DITCH EXTENTS, AND EQUIPMENT ASSOCIATED WITH THE TREATMENT SYSTEM ARE IN APPROXIMATE LOCATIONS.
2. CONTRACTOR SHALL PROVIDE RIP-RAP AT THE POINT OF DISCHARGE INTO THE DITCH.
3. CONTRACTOR SHALL PLACE PIPE ON A BEDDING OF STONE IN LOW AREAS ALONG WATERWAY TO ALLOW FOR RUNOFF FLOW.
4. CONTRACTOR SHALL CLEAR, GRUB, AND REMOVE TREES AS NECESSARY TO ACCESS THE CHECK DAM FROM THE NORTH.
5. CONTRACTOR SHALL SEED AND STRAW ACCORDING TO THE WDNR BEST MANAGEMENT PRACTICES. ANNUAL RYEGRASS, OR EQUAL, SHALL BE USED.
8. CONTRACTOR SHALL PROVIDE EROSION CONTROL PER THE WDNR STORMWATER BEST MANAGEMENT PRACTICES WITHIN THE LIMIT OF WORK.
9. CONTRACTOR SHALL PROVIDE 12 FT WIDE ACCESS ROAD FROM FTC SITE TO CHECK DAM USING NO. 1 STONE WHERE APPROPRIATE.

LEGEND:

—x—x—	FENCE
— — — —	CONDUIT
—o—o—o—	LIMIT OF WORK AREA
	CHECK DAM
	GRAVEL
—SF—	EROSION CONTROL

0 100 FEET

ARCADIS

LEGAL ENTITY:
ARCADIS U.S., Inc.
ARCHITECTURAL AND ENGINEERING SERVICES, INC.

COPYRIGHT: 2015

CONSULTANTS

NO.	DATE	ISSUED FOR	BY
0	10/30/18	DRAFT DESIGN PACKAGE FOR REVIEW	EE

SEALS: BENJAMIN J. VERBURG 31794 WAUWATOSA WI PROFESSIONAL ENGINEER

DATE:	10/30/18
PROJECT NO.:	WI001605.0001
FILE NAME:	DRAFT-9_SOUTHSITEAERIAL-R1
DESIGNED BY:	BV
DRAWN BY:	EE
CHECKED BY:	MA

2700 INDUSTRIAL PARKWAY SOUTH
MARINETTE, WISCONSIN 54143
215-362-0700
ANSUL FTC SITE

DITCH INTERIM ACTION DESIGN

ARCADIS PROJ. NO. WI001605.0001

SHEET TITLE

DITCH A SITE PLAN

SCALE:

C2

SHEET ___ OF 1

User:EEBERT Spec:AUS-NCSMOD File:Q:\APROJECTS\COM\001605\CADD\DITCH INTERIM ACTION\DITCH A ONLY PACKAGE\DRAFT-9_SOUTHSITEAERIAL-R1.DWG Scale:1:1 SavedDate:10/30/2018 Time:10:13 Plot Date: Ebert, Lisc 10/30/2018; 11:11 ; Layout:C2

SEDIMENT AND EROSION CONTROL GENERAL NOTES:

1. BEST MANAGEMENT PRACTICES (BMPS) SHALL BE INSTALLED PER THE PLAN AND SPECIFICATIONS, AND APPLICABLE LOCAL, STATE, AND FEDERAL REQUIREMENTS.
2. ACTIONS MUST BE TAKEN TO MINIMIZE THE TRACKING OF MUD AND SOIL FROM CONSTRUCTION AREAS ONTO PUBLIC ROADWAYS AND PLANT ACCESS DRIVES. SOIL TRACKED ONTO THE ROADWAY SHALL BE REMOVED DAILY.
3. SOIL STOCKPILES SHALL BE LOCATED AWAY FROM STREAMS, PONDS, SWALES, AND CATCH BASINS. STOCKPILES SHALL BE ADEQUATELY CONTAINED THROUGH THE USE OF SILT FENCE.
4. IF THE CONTROL DEVICE BECOMES INEFFECTIVE DUE TO WEATHERING, DECOMPOSING, OR DAMAGE, REPLACE THE AFFECTED SECTION IMMEDIATELY.
5. SEDIMENT MUST BE REMOVED WHEN IT REACHES APPROXIMATELY 1/3 THE HEIGHT OF THE SILT FENCE OR CHECK DAM, ESPECIALLY IF HEAVY RAINS ARE EXPECTED.
6. THE DRAWINGS AND SPECIFICATIONS INDICATE MINIMUM MEASURES AND BMP'S TO PROTECT AGAINST EROSION AND PROVIDE SEDIMENT CONTROL. ADDITIONAL BMP'S AND ESC MEASURES MAY BE REQUIRED BY THE CONTRACTOR TO MINIMIZE SEDIMENT FROM LEAVING THE CONSTRUCTION ZONE.
7. CONTRACTOR SHALL PERFORM ALL ACTIVITIES PER THE MOST RECENT LOCAL, STATE AND FEDERAL STORM WATER MANAGEMENT PROGRAM RULES AND REGULATIONS.

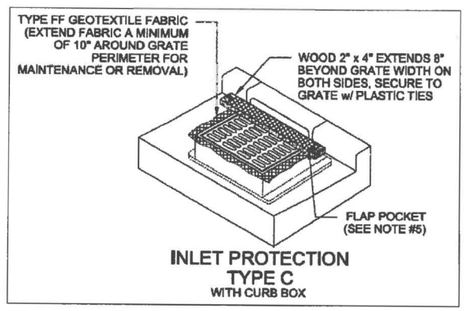

TYPICAL INLET PROTECTION
NOT TO SCALE

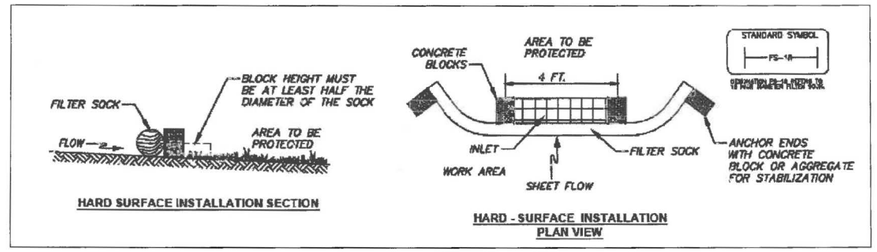

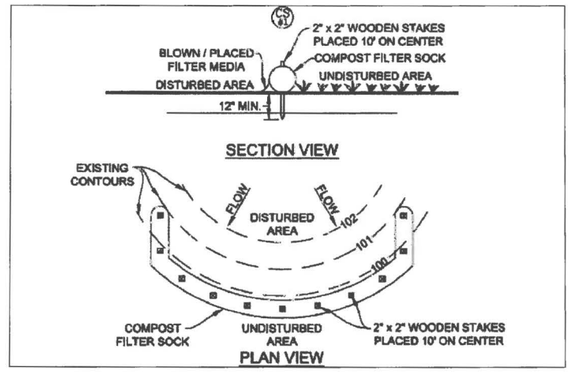

COMPOSITE FILTER SOCK
NOT TO SCALE

FILTER SOCK CONSTRUCTION SPECIFICATIONS

1. BEFORE INSTALLING, CLEAR ALL OBSTRUCTIONS INCLUDING ROCKS, CLODS, AND DEBRIS GREATER THAN 1-INCH THAT MAY INTERFERE WITH PROPER FUNCTION OF THE FILTER SOCK.
2. FILL SOCK UNIFORMLY WITH COMPOST OR ALTERNATE FILTER MEDIA TO DESIRED LENGTH, WITH ENOUGH MATERIAL THAT THE SOCKS DO NOT DEFORM.
3. PLACE SOCKS ALONG CONTOURS, WITH THE ENDS TURNED UPSLOPE AT 30 TO 45 DEGREES FOR A LENGTH OF AT LEAST 5 FEET TO PREVENT RUNOFF BYPASS.
4. FOR UNTRENCHED INSTALLATION, BACKFILL MULCH OR COMPOST ON THE UPSTREAM SIDE OF THE SOCK AND TAMP TO PREVENT UNDERCUTTING AND PIPING.
5. ANCHORING MUST CONFORM TO THE FOLLOWING LIST: (A) MINIMUM 2-INCH SQUARE CROSS SECTION HARDWOOD; (B) DRIVEN AT LEAST 12 INCHES BELOW GRADE, OR 8 INCHES IF IN DENSE CLAY SOILS; (C) PROTRUDE ABOVE FILTER SOCKS AT LEAST 3 INCHES; (D) DRIVEN IN AT 45-DEGREE ANGLE UPSLOPE; (E) SPACED AT NO MORE THAN 4 FEET APART, OR 8 FEET APART IF THE FILTER SOCK IS ENTRENCHED 4 INCHES INTO THE GROUND.
6. DO NOT USE ENTRENCHED INSTALLATION ON FILTER SOCKS SMALLER THAN 12 INCHES IN DIAMETER.
7. FOR HARD SURFACE INSTALLATION, SUCH AS ON PAVEMENT, ANCHORING MAY BE NECESSARY WHERE STRAIGHT SECTIONS EXCEED 4 FEET. SEE DETAIL ABOVE. WHEN NO ANCHORING IS USED, THE PRACTICE MUST BE CHECKED DAILY, REGARDLESS OF WHETHER RAINFALL OCCURS. ANCHORED INSTALLATION IS ALWAYS PREFERRED TO NON-ANCHORED INSTALLATION, IF POSSIBLE.
8. FOR AT-GRADE INLET PROTECTION, FILTER SOCKS MUST COMPLETELY ENCLOSE THE DRAIN. IF USED AS CURB INLET PROTECTION, THE EFFECTIVE HEIGHT OF THE FILTER SOCK MUST NOT BE HIGHER THAN THE HEIGHT OF THE CURB; USE 8-INCH DIAMETER FILTER SOCK FOR STANDARD HIGHWAY APPLICATIONS.
9. IF MULTIPLE SECTIONS OF FILTER SOCK ARE NEEDED FOR A CONTINUOUS RUN, OVERLAP ENDS OF SEPARATE SECTIONS A MINIMUM OF 2 FEET AND STAKE ENDS.
10. TO REACH TALLER HEIGHTS, IT IS POSSIBLE TO STACK FILTER SOCKS.
11. REMOVE SEDIMENT WHEN IT HAS ACCUMULATED TO A DEPTH OF HALF THE EXPOSED HEIGHT OF SOCK AND REPLACE SOCK. REPLACE FILTER SOCK IF TORN. REINSTALL FILTER SOCK IF UNDERMINING OR DISLODGING OCCURS. REPLACE CLOGGED FILTER SOCKS.
12. FOR VEGETATED, PERMANENT OR SEMI-PERMANENT INSTALLATIONS, MAINTAIN THE PLANTS AS IS APPROPRIATE FOR THE SPECIES USED.

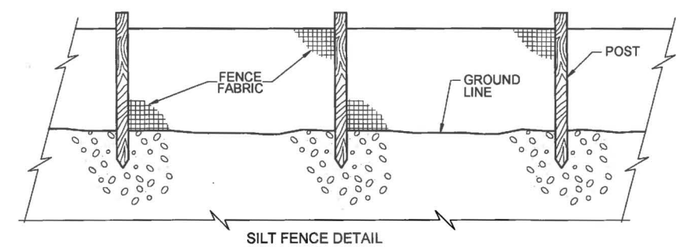

SILT FENCE DETAIL
NOT TO SCALE

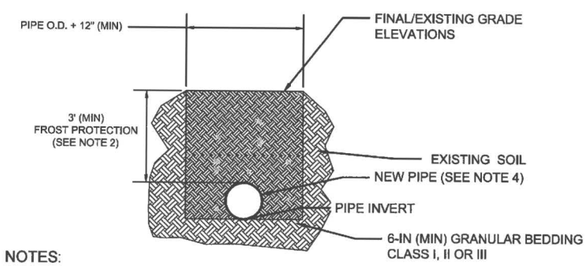

NOTES:

1. CONSTRUCTION TRAFFIC SHALL MAINTAIN AT LEAST 10' OF SEPARATION FROM BURIED PIPES AT ALL TIMES.
2. ALL PIPES SHALL BE BURIED SO THAT THE PIPE CROWN IS A MINIMUM OF 3' BELOW FINISHED GRADE.
3. TRENCHED PIPES SHALL BE MARKED WITH FLAGS OR SIGNS AT 50' INTERVALS TO NOTIFY POTENTIAL TRAFFIC OF THE PIPE'S EXISTENCE.

1 | C4 C4 — PIPE BURIAL DETAIL (BELOW FINISHED GRADE -NO ROAD)
NOT TO SCALE

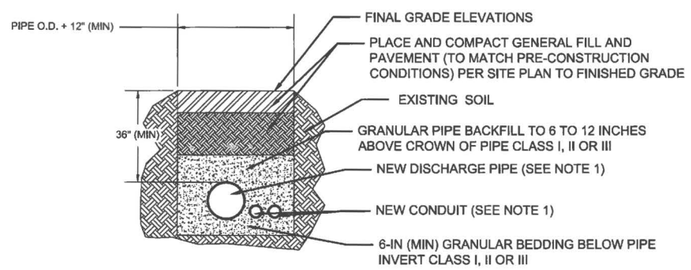

NOTES:

1. PROVIDE A MINIMUM OF 6" OF SEPARATION BETWEEN NEW PIPES.

2 | C4 C4 — PIPE BURIAL DETAIL (BELOW ROAD)
NOT TO SCALE

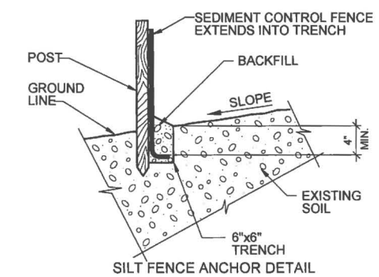

SILT FENCE ANCHOR DETAIL
NOT TO SCALE

NOTES:

1. CONTRACTOR SHALL FURNISH AND INSTALL SEDIMENT CONTROL FENCE.
2. FENCE FABRIC SHALL BE FASTENED SECURELY TO FENCE POSTS WITH TIES OR STAPLES
3. WHEN TWO SECTIONS OF FENCE FABRIC ADJOIN EACH OTHER JOIN IN ACCORDANCE WITH WDNR STORMWATER BEST MANAGEMENT PRACTICES.
4. MAINTENANCE SHALL BE PERFORMED AS REQUIRED BY THE WDNR STORMWATER BEST MANAGEMENT PRACTICES.
5. INSTALL SILT FENCE IN ACCORDANCE WITH THE WDNR STORMWATER BEST MANAGEMENT PRACTICES.

User:EEBERT Spec:AUS-NCSMGD File:G:\APROJECT\TYCO\WI001605\CADD\DITCH INTERIM ACTION\DRAFT-CIVIL DETAILS.DWG Scale:1:1 SavedDate:8/14/2018 Time:14:53 Plot Date: Ebert, Liz; 10/30/2018; 16:41 ; Layout:C4

ARCADIS

LEGAL ENTITY:
ARCADIS U.S., Inc.
ARCHITECTURAL AND
ENGINEERING SERVICES, INC.

COPYRIGHT: 2015

CONSULTANTS

NO.	DATE	ISSUED FOR	BY
0	10/30/18	DRAFT DESIGN PACKAGE FOR REVIEW	EE

SEAL

DATE:	10/30/18
PROJECT NO.	WI001605.0001
FILE NAME:	DRAFT-CIVIL DETAILS
DESIGNED BY:	BV
DRAWN BY:	EE
CHECKED BY:	MA

MARINETTE, WI
ANSUL FTC SITE

DITCH INTERIM ACTION DESIGN

ARCADIS PROJ. NO. WI001605.0001

SHEET TITLE

CIVIL DETAILS

SCALE:

C3

SHEET ___ OF 1

DETAIL NOTES:

1. COORDINATE ALL HANDHOLE OPENINGS WITH THE CONDUIT ACTUAL CONFIGURATION AND ELEVATION.
2. SLOPE CONDUITS 3" PER 100' TOWARDS HANDHOLES, UNLESS GREATER SLOPES REQUIRED TO ACCOMMODATE TOP OF DUCT BANK ELEVATIONS SHOWN ON SHEETS.
3. PROVIDE MINIMUM DEPTH SHOWN, UNLESS GREATER DEPTHS REQUIRED TO ACCOMMODATE CONDUIT ELEVATIONS UNLESS GREATER DEPTHS REQUIRED TO ACCOMMODATE CONDUIT SLOPES REQUIRED BY PREVIOUS NOTE.
4. PROVIDE MINIMUM DIMENSIONS SHOWN (3'-0" BY 3'-0"), UNLESS GREATER DIMENSIONS REQUIRED TO ACCOMMODATE INSTALLATION CONDITIONS.

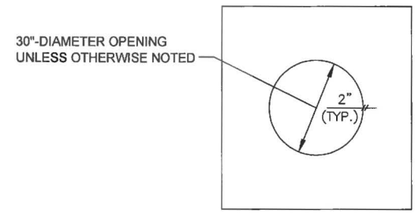

ROOF PLAN

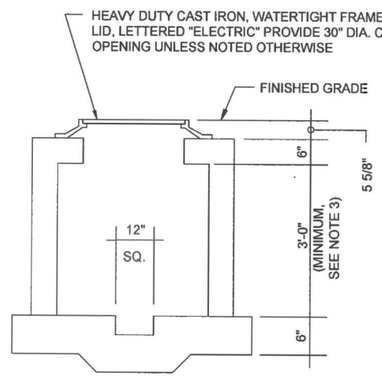

SECTION

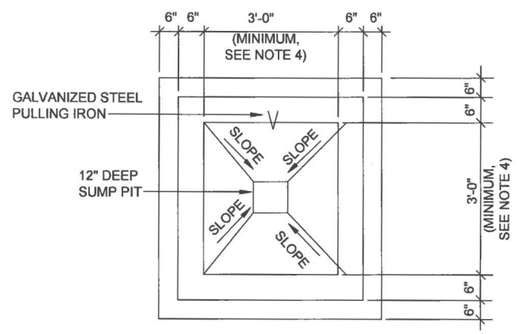

PLAN

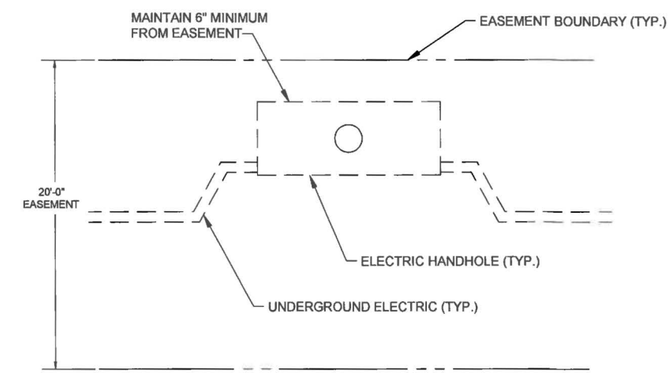

NOTE:

1. FOR HAND HOLES INSTALLED ALONG ROADWAY (WITH EASEMENT RESTRICTIONS)

3 | C2 C4 — ELECTRIC HANDHOLE (EHH) DETAIL
NOT TO SCALE

4 | C2 C4 — HAND HOLE INSTALLATION DETAIL
NOT TO SCALE

ARCADIS

LEGAL ENTITY:
ARCADIS U.S., Inc.
ARCHITECTURAL AND
ENGINEERING SERVICES, INC.

COPYRIGHT: 2015

CONSULTANTS

NO.	DATE	ISSUED FOR	BY
0	10/30/18	DRAFT DESIGN PACKAGE FOR REVIEW	EE

SEAL: BENJAMIN VERBURG 31794 WAUWATOSA WI WISCONSIN PROFESSIONAL ENGINEER

DATE	10/30/18
PROJECT NO.	WI001605.0001
FILE	DRAFT-10_CIVIL DETAILS
DESIGNED BY	BV
DRAWN BY	EE
CHECKED BY	MA

2700 INDUSTRIAL PARKWAY SOUTH
MARINETTE, WISCONSIN 54143
215-362-0700
ANSUL FTC SITE

DITCH INTERIM ACTION DESIGN

ARCADIS PROJ. NO. WI001605.0001

SHEET TITLE: CIVIL DETAILS

SCALE:

C4

SHEET ___ OF 1

User:EEBERT Spec:AUS-NCSMOD File:G:\APROJECT\TYCO\WI001605\CAD\DITCH INTERIM ACTION\DITCH A ONLY PACKAGE\DRAFT-10_CIVIL DETAILS.DWG Scale:1:1 SavedDate:10/24/2018 Time:09:29 Plot Date: Ebert, Liz; 10/30/2018; 10:36 ; Layout:C4

NOTES:

1. CONTRACTOR SHALL FILL SUMP EXCAVATION WITH DRAINAGE STONE.
2. CONSTRUCT STONE CHECK DAM IN ACCORDANCE WITH WDNR STORMWATER BEST PRACTICES.

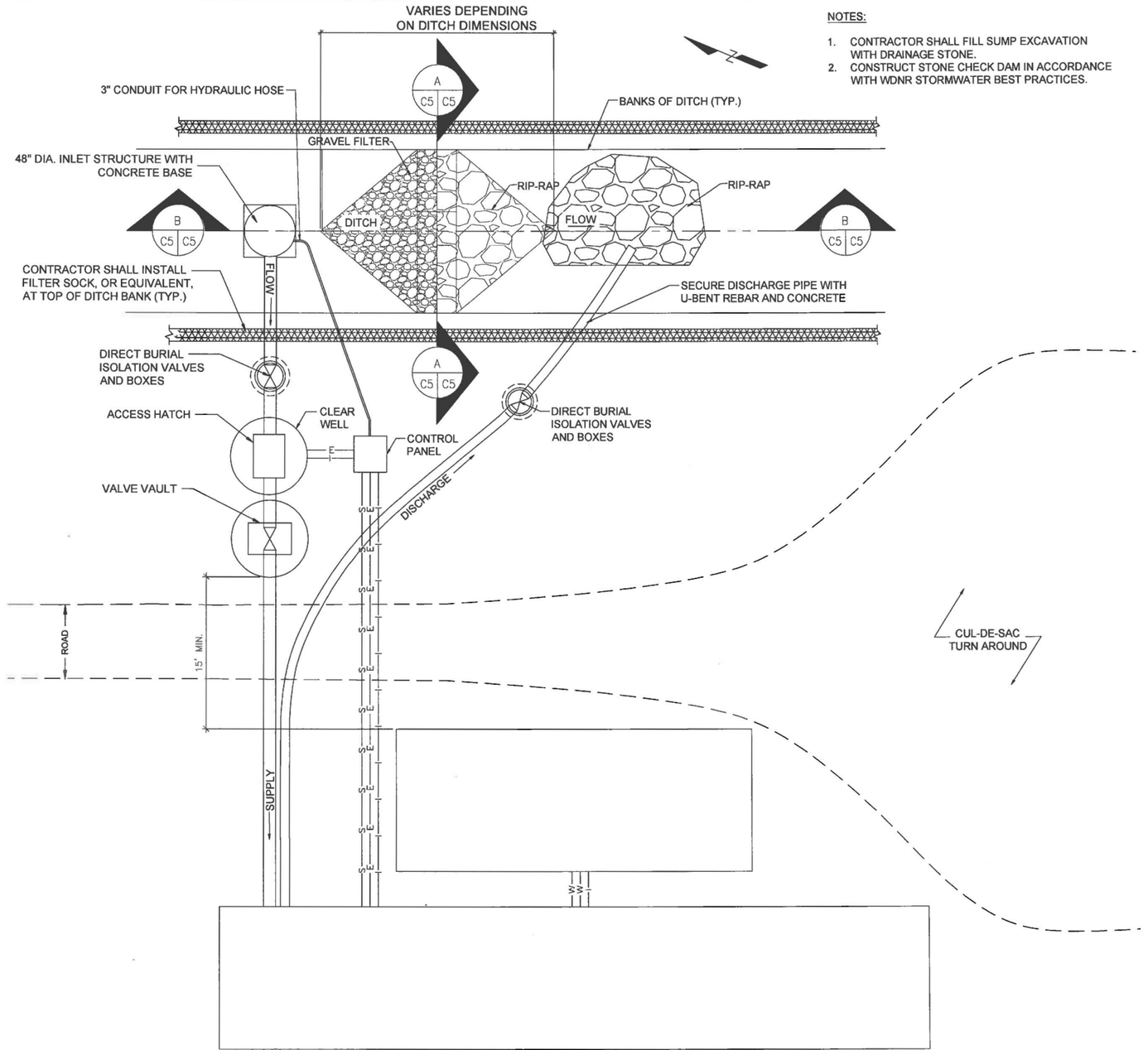

3 C2,C3 C5 CHECK DAM PLAN VIEW NOT TO SCALE

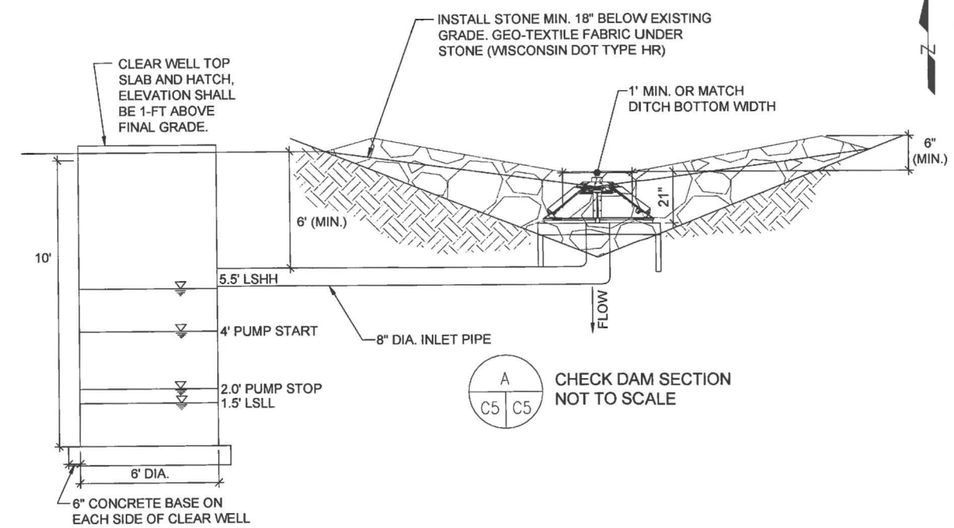

A C5 C5 CHECK DAM SECTION NOT TO SCALE

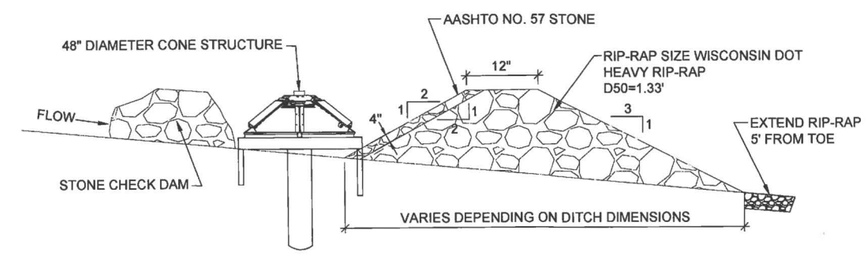

B C5 C5 CHECK DAM SECTION NOT TO SCALE

ARCADIS

LEGAL ENTITY:
ARCADIS U.S., Inc.
ARCHITECTURAL AND ENGINEERING SERVICES, INC.

COPYRIGHT: 2015

CONSULTANTS

NO.	DATE	ISSUED FOR	BY
0	10/30/18	DRAFT DESIGN PACKAGE FOR REVIEW	EE

SEAL: WISCONSIN BENJAMIN VERBURG 31724 WAUWATOSA WI PROFESSIONAL ENGINEER

DATE:	10/30/18
PROJECT NO:	WI001605.0001
FILE NAME:	DRAFT–CHECK DAM DETAIL
DESIGNED BY:	BV
DRAWN BY:	EE
CHECKED BY:	MA

2700 INDUSTRIAL PARKWAY SOUTH
MARINETTE, WISCONSIN 54143
215–362–0700
ANSUL FTC SITE

DITCH INTERIM ACTION DESIGN

ARCADIS PROJ. NO. WI001605.0001

SHEET TITLE

CHECK DAM DETAILS

SCALE:

C5

SHEET ___ OF 1

User:EBBERT Spec:AUS-NCSMOD File:G:\APROJECT\TYCO\WI001605\CADD\DITCH INTERIM ACTION\DITCH A ONLY PACKAGE\DRAFT-CHECK DAM DETAIL.DWG Scale:1:1 SavedDate:10/29/2018 Time:15:09 Plot Date: Ebert, Liz; 10/30/2018; 10:46 ; Layout:C5

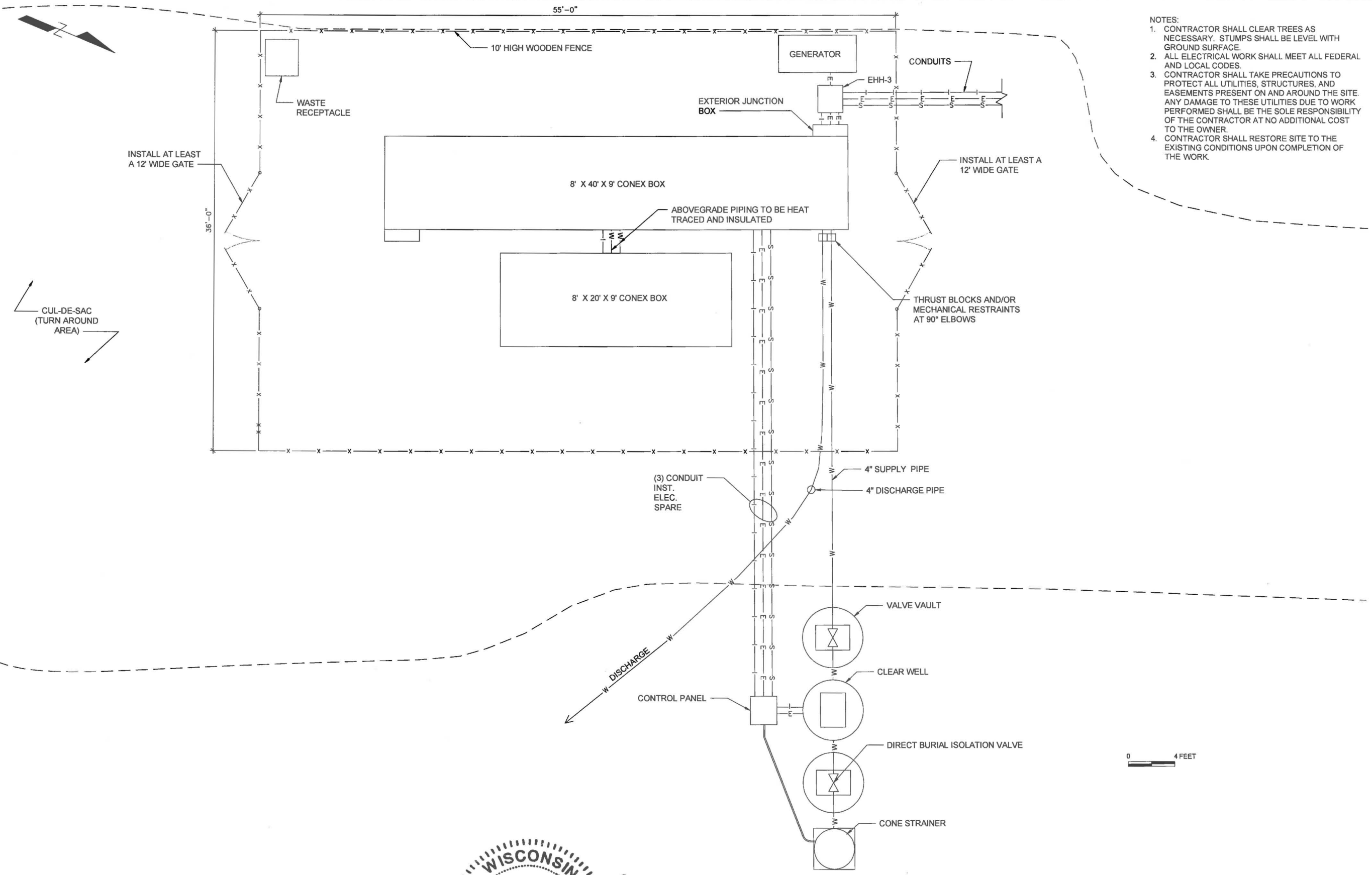

NOTES:

1. CONTRACTOR SHALL CLEAR TREES AS NECESSARY. STUMPS SHALL BE LEVEL WITH GROUND SURFACE.
2. ALL ELECTRICAL WORK SHALL MEET ALL FEDERAL AND LOCAL CODES.
3. CONTRACTOR SHALL TAKE PRECAUTIONS TO PROTECT ALL UTILITIES, STRUCTURES, AND EASEMENTS PRESENT ON AND AROUND THE SITE. ANY DAMAGE TO THESE UTILITIES DUE TO WORK PERFORMED SHALL BE THE SOLE RESPONSIBILITY OF THE CONTRACTOR AT NO ADDITIONAL COST TO THE OWNER.
4. CONTRACTOR SHALL RESTORE SITE TO THE EXISTING CONDITIONS UPON COMPLETION OF THE WORK.

User:EEBERT Spec:AUS-NCSMOD File:G:\APROJECTS\TYCO\WI001605\CADD\DITCH INTERIM ACTION\DITCH A ONLY PACKAGE\DRAFT-12_MECHANICAL LAYOUT.DWG Scale:1:1 Saved/Date: 10/29/2018 Time:15:03 Plot Date: Ebert, Liz: 10/30/2018; 10:38 ; Layout:M1

ARCADIS

LEGAL ENTITY:
ARCADIS U.S., Inc.
ARCHITECTURAL AND
ENGINEERING SERVICES, INC.

COPYRIGHT: 2015

CONSULTANTS

NO.	DATE	ISSUED FOR	BY
0	10/30/18	DRAFT DESIGN PACKAGE FOR REVIEW	EE

SEAL: WISCONSIN BENJAMIN VERBURG 31794 WAUWATOSA WI PROFESSIONAL ENGINEER

DATE: 10/30/18
PROJECT NO. WI001605.0001
FILE NAME: DRAFT-12_MECHANICAL_LAYOUT
DESIGNED BY: BV
DRAWN BY: EE
CHECKED BY: MA
APPROVED BY:

2700 INDUSTRIAL PARKWAY SOUTH
MARINETTE, WISCONSIN 54143
215-362-0700
ANSUL FTC SITE

DITCH INTERIM ACTION DESIGN

ARCADIS PROJ. NO. WI001605.0001

SHEET TITLE

SYSTEM GENERAL LAYOUT

SCALE:

M1

SHEET ___ OF 1

	CAPACITY	TOTAL DYNAMIC HEAD (TDH) REQUIRED	PIPE SIZE	PUMP TYPE	EQ TANK	MIN. TOTAL POUNDS OF CARBON	MINIMUM EMPTY BED CONTACT TIME (EBCT)	MINIMUM HYDRAULIC LOADING
SYSTEM A	100 GPM	34 FT	4" OR APPROVED EQUAL	GRINDER, SEWAGE, OR APPROVED EQUAL	3,000 GAL POLYETHYLENE TANK	10,000 LBS	15 MIN	1.5-2.5 GPM/SQ FT

NOTES:
1. CONTRACTOR SHALL PROVIDE ALL EQUIPMENT, INSTRUMENTATION AND ASSOCIATED ELECTRICAL WORK WITHIN THE TREATMENT SYSTEM EXTENTS AND P-100 AND ASSOCIATED CONTROLS AND VALVES.
2. LSHH-01 SHALL CONNECT TO CONTROL PANEL AT TREATMENT SYSTEM.
3. CONTRACTOR TO INCLUDE REMOTE ALARM NOTIFICATION DEVICE TO SEND NOTIFICATIONS OF ALARM CONDITIONS.
4. CONTRACTOR TO SUPPLY DIESEL POWER GENERATOR SUFFICIENTLY SIZED TO POWER TREATMENT SYSTEM.
5. NUMBER OF GRANULAR ACTIVATED CARBON VESSELS MAY VARY UPON ENGINEER APPROVAL.

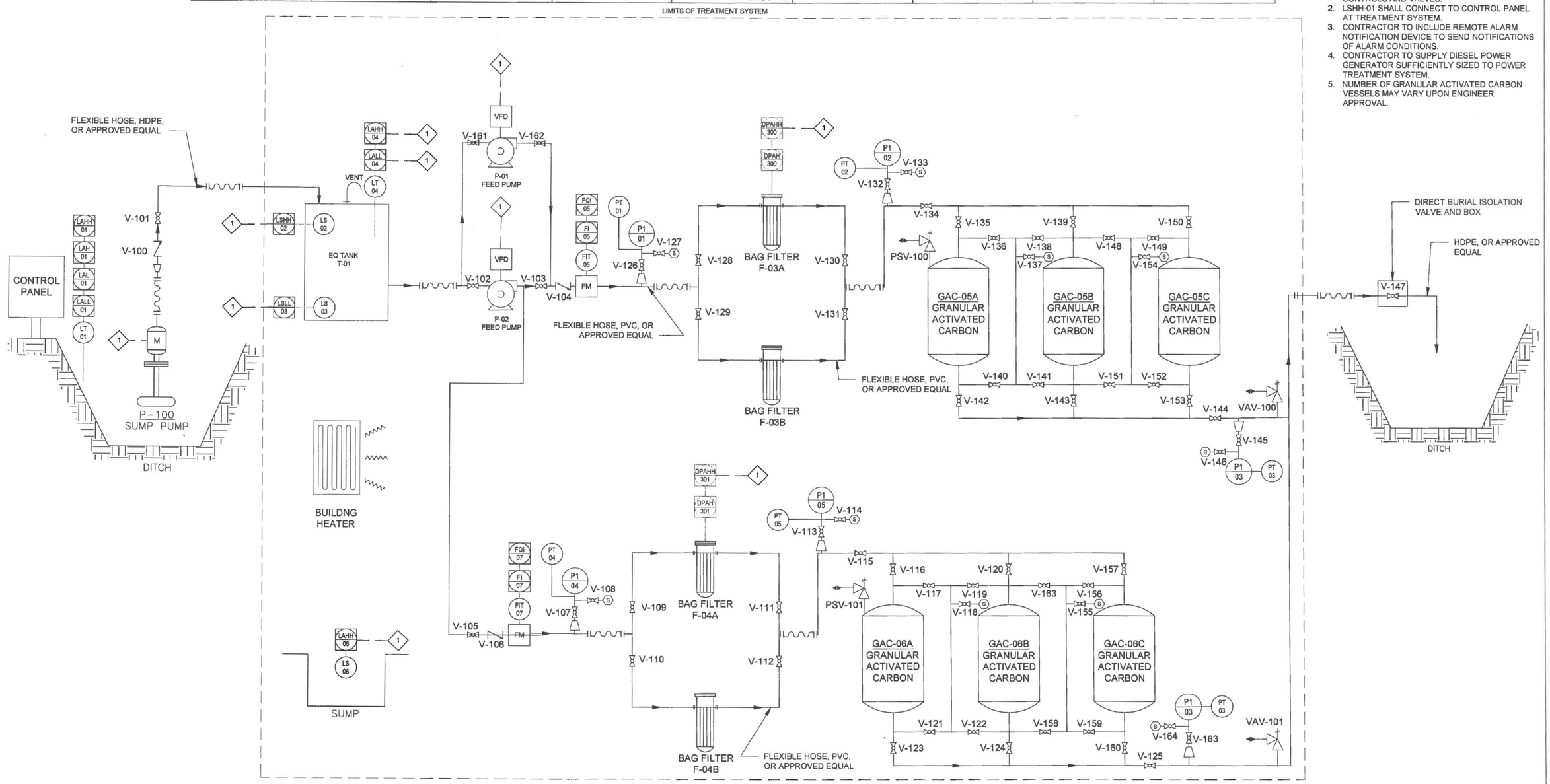

ARCADIS

LEGAL ENTITY:
ARCADIS U.S., Inc.
ARCHITECTURAL AND ENGINEERING SERVICES, INC.

COPYRIGHT: 2015

CONSULTANTS

NO.	DATE	ISSUED FOR	BY
0	10/30/18	DRAFT DESIGN PACKAGE FOR REVIEW	EE

WISCONSIN BENJAMIN J. VERBURG 31734 WAUWATOSA, WI PROFESSIONAL ENGINEER

DATE: 10/30/18
PROJECT NO.: WI001605.0001
FILE NAME: DRAFT-13_PIPING AND INSTRUMENTATION
DESIGNED BY: BV
DRAWN BY: EE
CHECKED BY: MA

2700 INDUSTRIAL PARKWAY SOUTH
MARINETTE, WISCONSIN 54143
215-362-0700
ANSUL FTC SITE

DITCH INTERIM ACTION DESIGN

ARCADIS PROJ. NO. WI001605.0001

SHEET TITLE
PIPING AND INSTRUMENTATION DIAGRAM

SCALE:
P1

SHEET ___ OF 1

User:EBBERT Spec:AUS-NCSMOD File:G:\APROJECT\TYCO\WI001605\CAD\DITCH INTERIM ACTION\DITCH A ONLY PACKAGE\DRAFT-13_PIPING AND INSTRUMENTATION.DWG Scale:1:1 SavedDate:10/26/2018 Time:07:56 Plot Date: Ebert, Liz: 10/30/2018; 10:40 ; LayoutP1

NOTES:

1. ALL EQUIPMENT/SERVICE CONNECTED UPSTREAM OF ATS SHALL BE INSTALLED AT A LATER DATE.

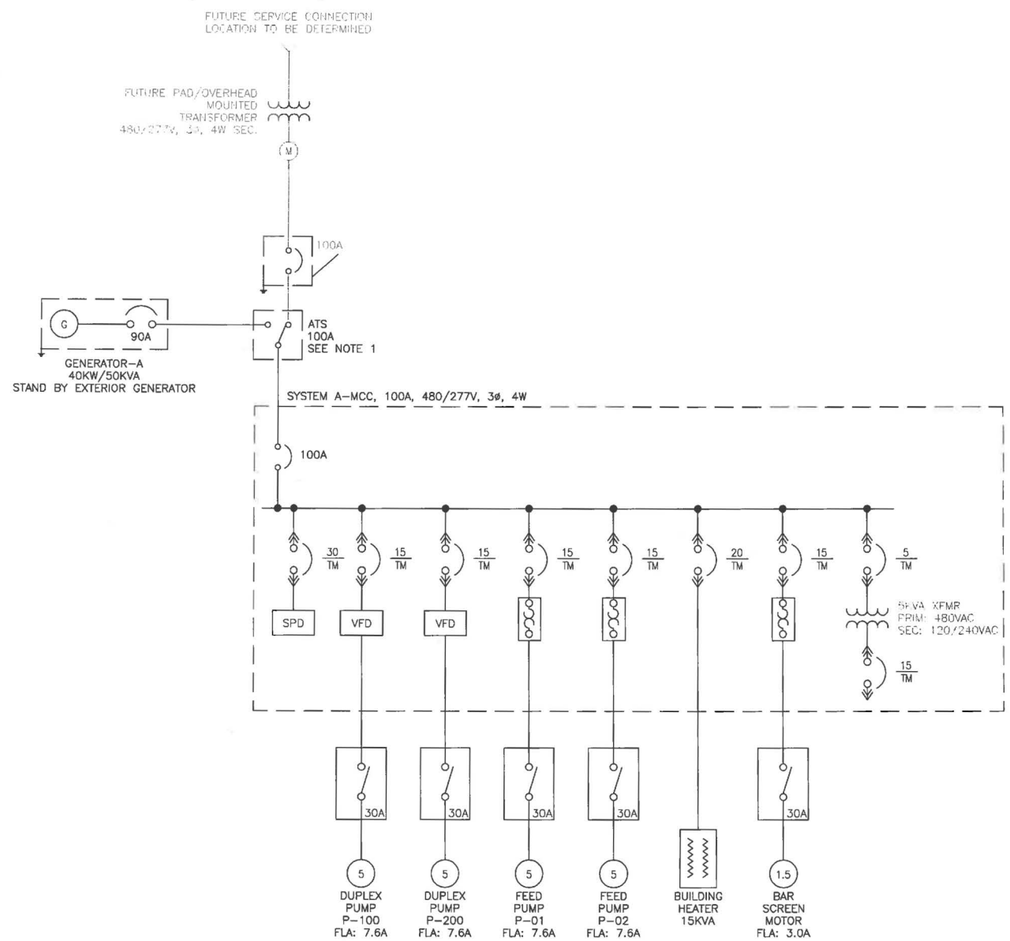

SYSTEM A-MCC (480 VAC)									
DEVICE	VOLTAGE	PHASE	HP	DUTY FACTOR	BREAKER SIZE (AMPS)	CONNECT LOAD - 480V (AMPS)**	DEMAND LOAD - 480V (AMPS)**	kVA	
DUPLEX PUMP P-100	480	3	5.00	100.0%	15	7.60	7.60	6.31	
DUPLEX PUMP P-200	480	3	5.00	100.0%	15	7.60	7.60	6.31	
FEED PUMP P-01	480	3	5.00	100.0%	15	7.60	7.60	6.31	
FEED PUMP P-02	480	3	5.00	100.0%	15	7.60	7.60	6.31	
BUILDING HEATER (3)	480	3	–	100.0%	25	22.64	22.64	18.80	
CONTROL PANEL @ CLEAR WELL	480	3	–	100.0%	–	–	–	–	
BAR SCREEN MOTOR LOAD	480	3	1.50	100.0%	15	3.00	3.00	2.49	
					SUBTOTALS :	56	56	46.54	
						TOTAL ELECTRICAL LOAD:		65.97	CONNECTED AMPS
**VALUES TAKEN FROM 2017 NEC								55.97	DEMAND AMPS
MAIN BREAKER INFORMATION								70	MINIMUM BREAKER SIZE
								100	MAIN BREAKER

ARCADIS

LEGAL ENTITY:
ARCADIS U.S., Inc.
ARCHITECTURAL AND
ENGINEERING SERVICES, INC.

COPYRIGHT: 2015

CONSULTANTS

NO.	DATE	ISSUED FOR	BY
0	10/30/18	DRAFT DESIGN PACKAGE FOR REVIEW	EE

SEAL: WISCONSIN BENJAMIN VERBURG 31704 WAUWATOSA, WI PROFESSIONAL ENGINEER

DATE:	10/30/18
PROJECT NO:	WI001605.0001
FILE NAME:	DRAFT–14_SINGLE LINE
DESIGNED BY:	BV
DRAWN BY:	EE
CHECKED BY:	MA

2700 INDUSTRIAL PARKWAY SOUTH
MARINETTE, WISCONSIN 54143
215–362–0700
ANSUL FTC SITE

DITCH INTERIM ACTION DESIGN

ARCADIS PROJ. NO. WI001605.0001

SHEET TITLE

ELECTRICAL SINGLE LINE DIAGRAM

SCALE:

E1

SHEET ___ OF 1

User:EBERT Spec:AUS-ACSMCD File:C:\APROJECT\TYCO\WI001605\CADD\DITCH INTERIM ACTION\DITCH A ONLY PACKAGE\DRAFT-14_SINGLE LINE.DWG Scale:1:1 SavedDate:10/25/2018 Time:15:10 Plot Date: Ebert, Liz, 10/30/2018, 10:42, Layout:E1