J-Star Industries

Site Investigation Report and Remedial Action Plan

RECEIVED
OCT - 5 2000
ERS DIVISION

Prepared by:

STRAND ASSOCIATES, INC.®
Excellence in Engineering Since 1946
910 West Wingra Drive
Madison, WI 53715

June 2000

STRAND
ASSOCIATES, INC.
ENGINEERS®

"I, Luke T. Hellermann, hereby certify that I am a hydrogeologist as that term is defined in s. NR 712.03(1), Wis. Adm. Code, and that, to the best of my knowledge, all of the information contained in this document is correct and the document was prepared in compliance with all applicable requirements in chs. NR 700 to 726, Wis. Adm. Code."

Luke T. Hellermann, P.G., Hydrogeologist

6-27-00
Date

WISCONSIN
LUKE T.. HELLERMANN
G-496
MADISON
WI
PROFESSIONAL HYDROGEOLOGIST

TABLE OF CONTENTS

Page No.

EXECUTIVE SUMMARY iii

SECTION 1 - INTRODUCTION
1.01 PURPOSE AND SCOPE 1-1
1.02 ABBREVIATIONS AND DEFINITIONS 1-1
1.03 GENERAL INFORMATION 1-2

SECTION 2 - SITE DESCRIPTION
2.01 SITE LOCATION 2-1
2.02 SITE HISTORY 2-1
2.03 GEOLOGY, HYDROGEOLOGY, AND HYDROLOGY 2-1
2.04 POTENTIAL RECEPTORS OF CONTAMINATION 2-3

SECTION 3 - INVESTIGATION RESULTS AND DISCUSSION
3.01 FIELD INVESTIGATION SUMMARY 3-1
3.02 SAMPLING LOCATIONS AND RATIONAL 3-1
3.03 SOIL ANALYTICAL RESULTS 3-2
3.04 GROUNDWATER ANALYTICAL RESULTS 3-3
3.05 QUALITY ASSURANCE/QUALITY CONTROL 3-3
3.06 DISCUSSION 3-4

SECTION 4 - CONCLUSIONS AND RECOMMENDATIONS

4.01 CONCLUSIONS 4-1
4.02 POTENTIAL REMEDIATION ALTERNATIVES 4-1
4.03 RECOMMENDED REMEDIATION ALTERNATIVE 4-4
4.04 SCHEDULE AND ESTIMATED TOTAL COST 4-6

LIST OF TABLES

Page Following

2.03-1 WATER LEVEL ELEVATIONS 2-2
3.02-1 SOIL SCREENING RESULTS 3-2

3.03-1 SOIL ANALYTICAL RESULTS 3-2
3.04-1 GEOPROBE GROUNDWATER ANALYTICAL RESULTS 3-3

TABLE OF CONTENTS (Continued)

3.04-2 MONITORING WELL GROUNDWATER ANALYTICAL RESULTS 3-3
4.03-1 REMEDIATION ALTERNATIVES PROBABLE COST 4-6

LIST OF FIGURES

Page
Following

2.01-1 SITE LOCATION MAP 2-1
2.01-2 SITE AND SURROUNDING AREA 2-1
2.02-1 SITE PLAN 2-1
2.03-1 GEOLOGIC CROSS SECTION MW-2 TO MW-3 2-2
2.03-2 GEOLOGIC CROSS SECTION MW-3 TO SB-4 2-2
2.03-3 GROUNDWATER ELEVATIONS 2-3
3.06-1 ESTIMATED EXTENT OF SOIL CONTAMINATION 3-4
3.06-2 ESTIMATED EXTENT OF GROUNDWATER CONTAMINATION 3-5

APPENDICES

APPENDIX A - PREVIOUS INVESTIGATION RESULTS
APPENDIX B - BORING LOGS, ABANDONMENT FORMS, AND WELL CONSTRUCTION AND DEVELOPMENT FORMS
APPENDIX C - SLUG TEST DATA
APPENDIX D - DATA COLLECTION PROCEDURES AND ANALYTICAL METHODS
APPENDIX E - SOIL AND GROUNDWATER ANALYTICAL REPORTS

EXECUTIVE SUMMARY

In accordance with Wisconsin Administrative Code NR 700, this report summarizes the subsurface investigation and results and discusses potential remediation options for the property at 801 Janesville Avenue, Fort Atkinson, Jefferson County, Wisconsin. The property is owned by J - Star Industries Inc., a farm implement and machinery manufacturing facility. The investigation was requested by the Wisconsin Department of Natural Resources (DNR) after petroleum-related soil contamination was detected during the removal of two underground storage tanks (USTs).

The report includes: an introduction; site description, including a summary of the site location, site history, geology, hydrogeology, and hydrology, and potential receptors of contamination; a summary of the field investigation and a discussion of the investigation results; conclusions; discussion of potential remediation alternatives; and discussion of the recommended remedial alternative. Supporting documentation found in the appendices includes boring logs and abandonment forms and monitoring well construction and development forms, results of previous investigations, a summary of site investigation procedures, and copies of analytical reports. A brief summary of the results, conclusions, and recommendations follows.

1. Results and Discussion

   On December 21, 1998, Geoprobe borings (SB-1 through SB-4) were completed at the site. Soil and groundwater samples were collected from the borings to assess the extent of the petroleum-related contamination. Based on the Geoprobe investigation results, four permanent monitoring wells (MW-1 through MW-4) and one piezometer (PZ-1) were constructed at the site in August 1999.

   Soil sample screening and analytical results indicate that soil contamination extends south from the former location of the USTs to a point near monitoring well MW-4.

   Analytical results indicate that petroleum-related groundwater contamination extends in a plume from the former location of the USTs (MW-1, SB-1, and PZ-1) to a point south of monitoring well MW-4.

2. Conclusions and Recommendations

   Site investigation data indicates that soil and groundwater at the site have been impacted by petroleum hydrocarbon contamination. Soil contamination exceeding Wisconsin

Administrative Code NR 720 cleanup guidelines was detected at borings SB-1 and SB-2. Petroleum-related groundwater contamination exceeding Wisconsin Administrative Code NR 140 Preventive Action Limits (PALs) was detected in groundwater samples collected from monitoring wells MW-1, MW-2, MW-4, PZ-1 and from soil borings SB-1, SB-3, and SB-4. Wisconsin Administrative Code NR 140 Enforcement Standard (ES) exceedances were only detected in groundwater samples from soil boring SB-1 and piezometer PZ-1.

Investigation data suggests that the groundwater plume is receding, which indicates that a majority of the source contamination was removed by excavation of the USTs. Based on the site investigation data collected and the apparent receding groundwater plume, it appears that no additional site investigation or active site remediation is warranted.

3. Remediation Options

Natural attenuation, enhanced bioremediation, soil vapor extraction, and soil excavation with on-site biopiling are the soil remediation alternatives being considered. Natural attenuation, enhanced bioremediation, and groundwater extraction/treatment are the groundwater remediation alternatives being considered.

Soil Remediation

Remediation by natural attenuation is recommended. We estimate that a majority of impacted soils in the source area were removed during UST removal and source area excavation. An area of impacted soil likely remains beneath the building. This soil is not accessible and it would not be cost-effective to remove it. Through the process of biodegradation, remaining impacted soil concentrations will decline over time to allowable levels.

Groundwater Remediation

Evaluation of the groundwater plume for potential remediation via natural attenuation is recommended. The preliminary groundwater plume evaluation and subsequent remediation via natural attenuation is the lowest-cost, feasible alternative.

SECTION 1
INTRODUCTION

1.01 PURPOSE AND SCOPE

This investigation was authorized by J - Star Industries to assess the extent of soil and groundwater petroleum contamination at the J - Star Industries site, 801 Janesville Avenue in Fort Atkinson, Wisconsin. The investigation was requested by the Wisconsin Department of Natural Resources (DNR) following the detection of petroleum-related contamination in the soil at the site during the removal of two USTs. The purpose of this investigation was to assess the extent and magnitude of impacted soil and groundwater at the site. The scope of the investigation was as follows:

1. Construction of four Geoprobe borings and collection of soil and groundwater samples for on-site screening and off-site laboratory analysis for petroleum volatile organic compounds (PVOCs), gasoline range organics (GRO), diesel range organics (DRO), and lead.

2. Construction and sampling of four groundwater monitoring wells and one piezometer. Groundwater samples were submitted for laboratory analysis for volatile organic compounds (VOCs), GRO, DRO, and lead.

3. Performance of a site survey to establish the elevations of the monitoring wells above mean sea level (AMSL).

4. Characterization of the shallow groundwater flow zone through the performance of hydraulic conductivity "slug tests".

This report was prepared in accordance with the Wisconsin DNR "Guidance for Conducting Environmental Response Actions", March 1992, and Wisconsin Administrative Code NR 716.

1.02 ABBREVIATIONS AND DEFINITIONS

The following abbreviations and terms are used in this report:

AMSL	-	above mean sea level
BGS	-	below ground surface

CY	-	cubic yard
DNR	-	Department of Natural Resources
DRO	-	diesel range organics
ES	-	enforcement standard
eV	-	electron-volt
GRO	-	gasoline range organics
HCl	-	hydrochloric acid
mg/kg	-	milligrams per kilogram (approximately equivalent to ppm if dry weight basis)
PAL	-	preventive action limit
PID	-	photoionization detector
PVOCs	-	petroleum volatile organic compounds
µg/kg	-	micrograms per kilogram (approximately equivalent to ppb if dry weight basis)
µg/L	-	micrograms per liter (approximately equivalent to ppb in dilute solutions)
UST	-	underground storage tank
VOCs	-	volatile organic compounds

1.03 GENERAL INFORMATION

Owner: J - Star Industries
801 Janesville Avenue
Fort Atkinson, Wisconsin 53538

Contact: Mark Butorac
(920) 563-5521

Consultant: Strand Associates, Inc.
910 West Wingra Drive
Madison, Wisconsin 53715

Contact: Luke T. Hellermann
(608) 251-4843

Drilling Contractor:	Badger State Drilling Co., Inc. 360 Business Park Circle Stoughton, Wisconsin 53589 Contact: Mark Garwick (608) 877-9770
Geoprobe Contractor:	Strata Morph Geoexploration, Inc. 1648 Calico Ct. Sun Prairie, WI 53590 Contact: Michael Kolb (608) 825-7703
DNR Project Manager:	Department of Natural Resources Southern District Headquarters 3911 Fish Hatchery Road Fitchburg, Wisconsin 53711 Contact: Marilyn Jahnke (608) 275-3466
Analytical Laboratory 2000:	Commonwealth Technology, Inc. 1230 Lange Court Baraboo, Wisconsin 53913-3109 Contact: Dennis Linley (800) 228-3012

Analytical Laboratory 1999:	En Chem, Inc. 1795 Industrial Drive Green Bay, Wisconsin 54302 Contact: Elizabeth Graf (800) 736-2436
Analytical Laboratory 1998:	Northern Lake Service, Inc. 400 North Lake Avenue Crandon, Wisconsin 54520 Contact: Steve Crupi (715) 478-2777

SECTION 2
SITE DESCRIPTION

2.01 SITE LOCATION

The J - Star Industries site is located at 801 Janesville Ave in the SW1/4 of SE1/4, Section 4, T5N, R14E in Fort Atkinson, Jefferson County, Wisconsin. Figure 2.01-1 is a site location map showing the project site and the topography of the area.

The site is located in a residential and industrial area. Parkland borders the site to the north. To the west across Janesville Avenue and to the south across Rockwell Avenue are industrial properties. Residential property is adjacent to the site on the eastside. Figure 2.01-2 shows the former location of the USTs and the area surrounding it.

2.02 SITE HISTORY

According to representatives of J-Star Industries, the facility has operated at its current location, manufacturing farm machinery, since approximately 1927. In addition to the current manufacturing building (built in 1927) and office building (built in 1975), there was also a foundry building in operation on the site from 1927 to 1979. Prior to the development of the manufacturing facility, the property use was agricultural.

Two 500-gallon underground storage tanks (USTs) were removed from the site on August 12, 1998, by AMPE Excavating, Inc. The tanks formerly contained leaded gasoline and diesel fuel. The approximate former locations of the USTs are shown on the Site Plan, Figure 2.02-1.

Obvious soil contamination was observed during the tank removals and soil samples were collected by Seymour Environmental (Seymour) to confirm the contamination. Concentrations of DRO and GRO were detected at 230 and 1,700 milligrams per kilogram (mg/kg), respectively. The tank closure documentation indicates an observed soil staining and obvious petroleum odor in the soils. The tank closure documentation and analytical report are provided in Appendix A.

At the time of the tank removals, contaminated soils were excavated and stockpiled on site for future treatment or disposal. Seymour observed the excavation and collected one soil sample from each wall of the excavation (four samples) and one sample from the base of the excavation. The only soil sample collected that did not have NR 720 soil standard exceedance for GRO and/or PVOCs was collected from the north wall at an approximate depth of 7 feet below ground surface (BGS).

MASTERGRAPHICS 611956

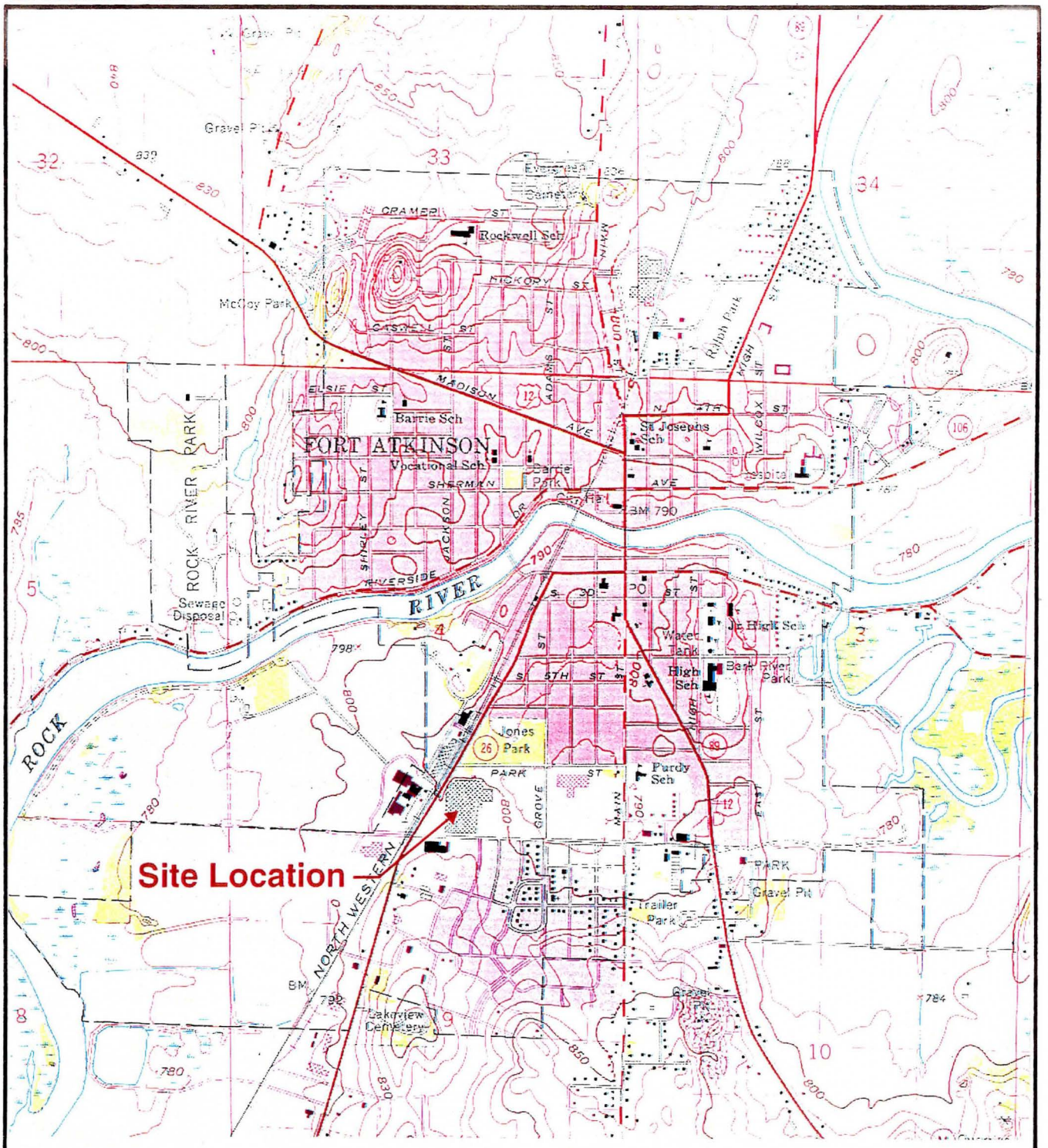

SITE LOCATION

USGS TOPOGRAPHICAL MAP
FORT ATKINSON QUADRANGLE

SCALE: 1" = 1000'

N

FIGURE 2.01-1	J-STAR INDUSTRIES 801 JANESVILLE AVENUE FORT ATKINSON, WISCONSIN SITE LOCATION	STRAND ASSOCIATES, INC ENGINEERS

541-926-1A

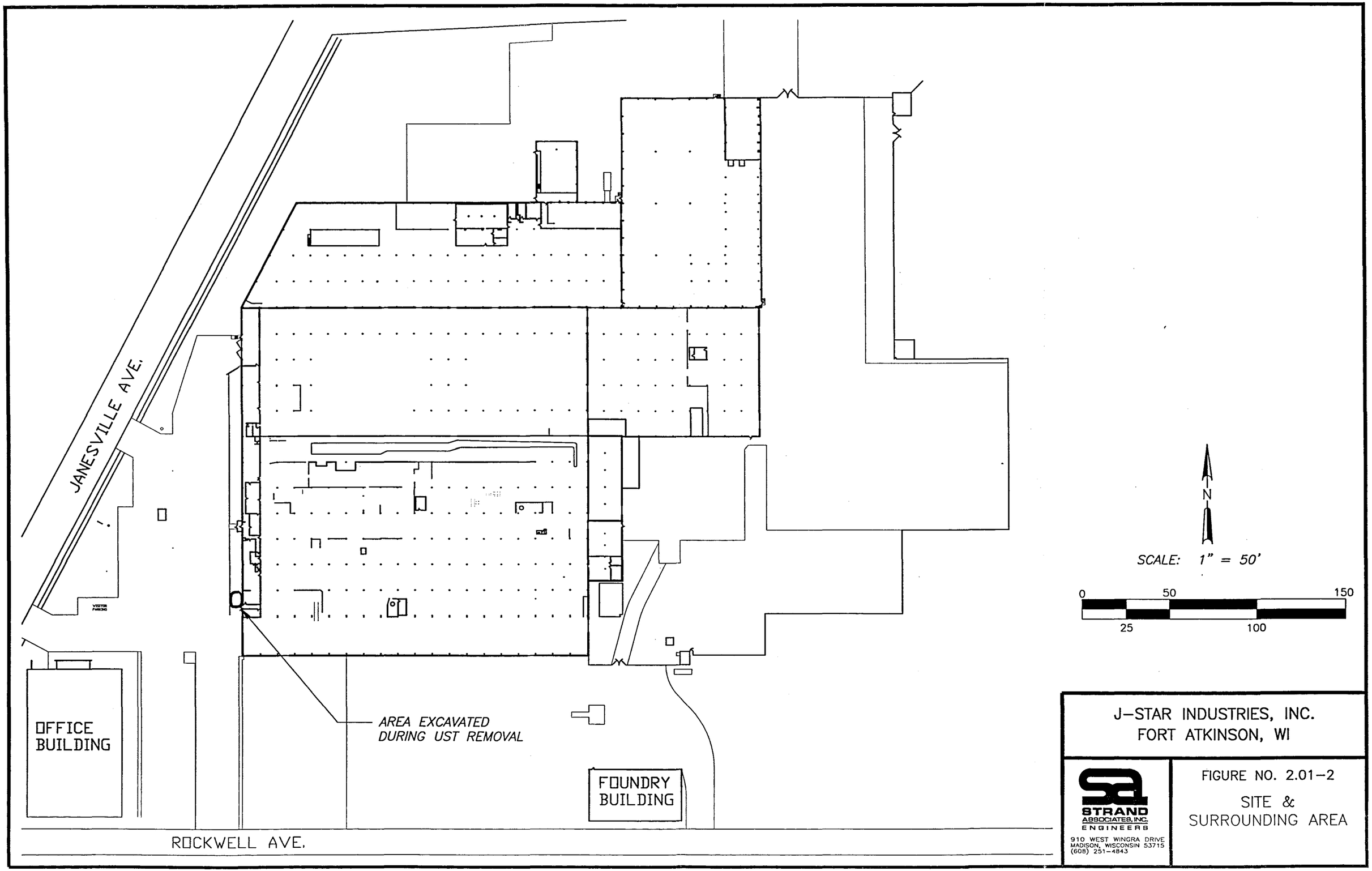

DATE: MAY 05, 2000 – TIME: 11:55 AM – CAD TECH: bonnieh

541-926-

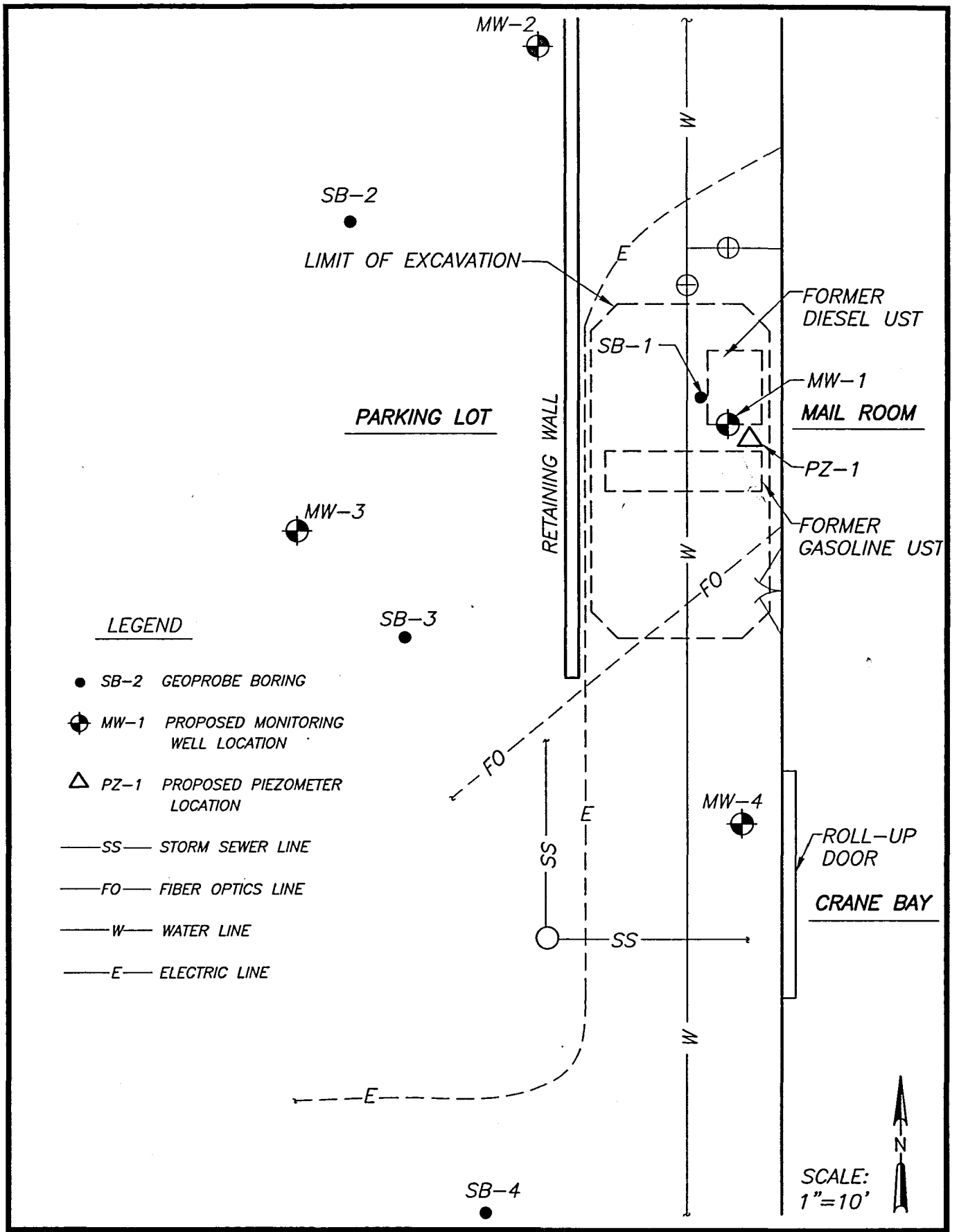

FILE: S:\@Sa\501--550\541\926\acad\SP-F2.dwg
DATE: MAY 02, 2000 - TIME: 2:31 PM - CAD TECH: nolanc

FIGURE 2.02-1 541-926	J-Star Industries 801 Janesville Avenue Fort Atkinson, Wisconsin SITE PLAN	STRAND ASSOCIATES, INC. ENGINEERS

A site map prepared by Seymour showing the sampling locations and analytical data for the excavation samples is provided in Appendix A.

2.03 GEOLOGY, HYDROGEOLOGY AND HYDROLOGY

A. Regional

The regional geology is influenced by the preglacial valley system in the county. The valleys cut through the upper bedrock unit of most of the county, the Galena Platteville unit, as well as the older units such as the St. Peter Sandstone, Prairie du Chien Group, and the Cambrian sandstones. Surface deposits are primarily glacial sediments that range in thickness from 0 feet in the northwest part of the county to more than 400 feet in the southwest part of the county. Typically underlying the glacial deposits are Ordivician to Cambrian age bedrock formations of dolomite, sandstone, or shale depending on the area of Jefferson County and the location relative to a drainage valley. The groundwater flow direction in Jefferson County is generally toward the Rock River.

In the vicinity of the site, surface water appears to drain toward the Rock river, generally to the north and west.

B. Local

1. Geology

Soil borings were advanced to depths up to 34 feet BGS. Borings constructed during the investigation indicate that native soils at the site generally consist of sandy or silty clay to depths of about 12 ft BGS, with sandy silt extending from 12 feet to at least 34 feet BGS.

A layer of sand with gravel was identified at depths of about 8 to 12 feet BGS. The sand layer varied in thickness from 2 inches up to 2 feet.

A cross section of the generalized site geology is shown as Figures 2.03-1 and 2.03-2. Soil Boring Logs and Borehole Abandonment Forms are included in Appendix B.

2. Hydrogeology

On October 5, 1999, hydraulic conductivity tests were performed on wells MW-1and MW-2. Falling head "slug tests" were conducted at each well using a stainless steel slug, an In-Situ

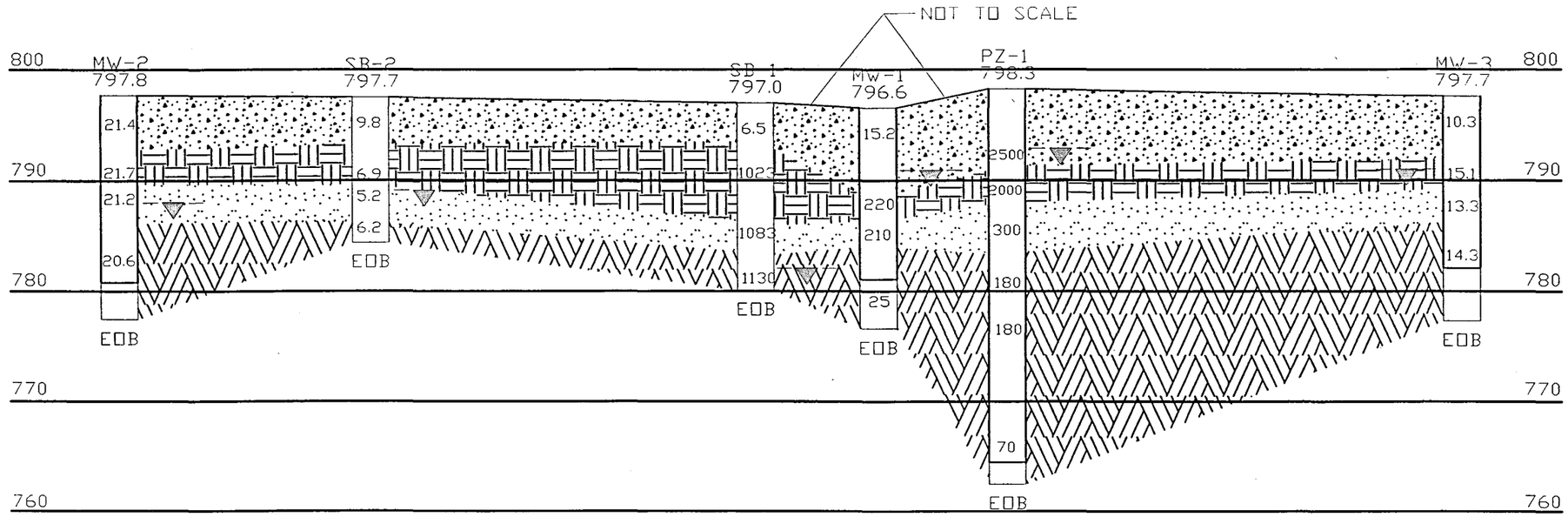

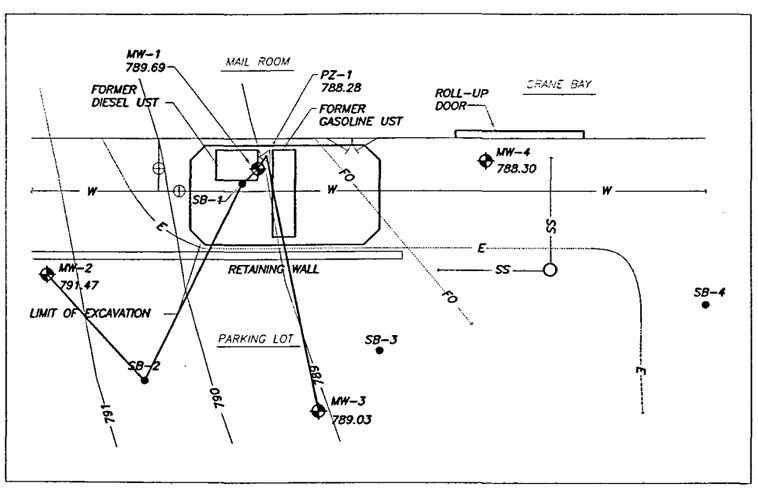

LEGEND

- SAND WITH CLAY AND FILL
- SILTY CLAY
- SAND WITH SOME GRAVEL
- SANDY SILT
- WELL SCREEN
- 5.1 PID READING
- INDICATES GW DEPTH

SCALE

1" = 100' HORIZONTAL
1" = 10' VERTICAL

NOTE: SOIL INTERFACES BETWEEN BORINGS ARE INTERPRETED FROM SOIL TYPES ENCOUNTERED AT BORINGS.

J-STAR INDUSTRIES
801 JANESVILLE AVENUE
FORT ATKINSON, WISCONSIN

STRAND ASSOCIATES, INC. ENGINEERS®
910 WEST WINGRA DRIVE
MADISON, WISCONSIN 53715
(608) 251-4843

FIGURE 2.03-1

GEOLOGIC CROSS-SECTION MW-2 TO MW-3

FILE: S:\0Sol\501---550\541\926\acad\FIG-2-03-1.dwg
DATE: MAY 02, 2000 - TIME: 4:51 PM - CAD TECH: nolanc

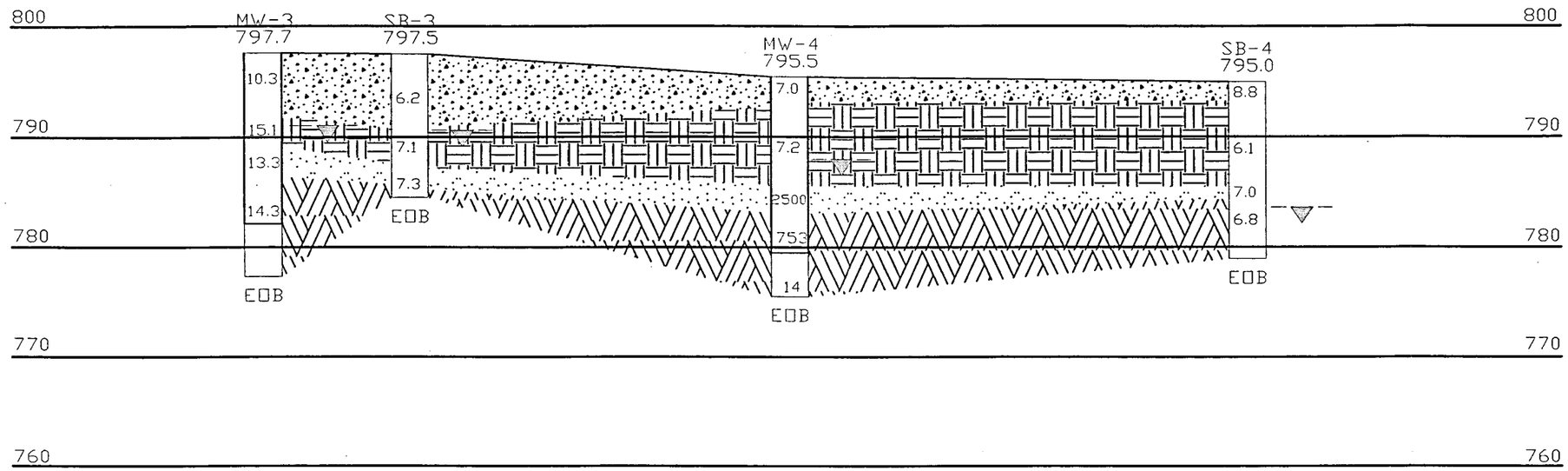

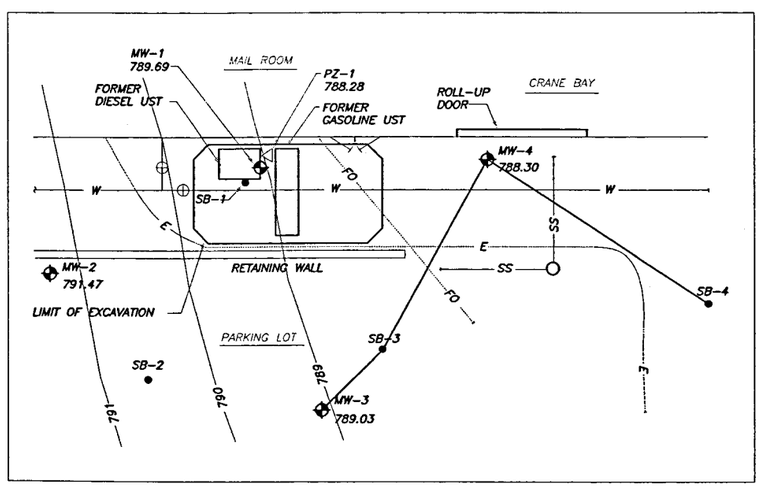

LEGEND

- SAND WITH CLAY AND FILL
- SILTY CLAY
- SAND WITH SOME GRAVEL
- SANDY SILT
- WELL SCREEN
- 5.1 PID READING
- INDICATES GW DEPTH

SCALE

1" = 100' HORIZONTAL
1" = 10' VERTICAL

NOTE: SOIL INTERFACES BETWEEN BORINGS ARE INTERPRETED FROM SOIL TYPES ENCOUNTERED AT BORINGS.

J-STAR INDUSTRIES
801 JANESVILLE AVENUE
FORT ATKINSON, WISCONSIN

STRAND ASSOCIATES, INC. ENGINEERS®
910 WEST WINGRA DRIVE
MADISON, WISCONSIN 53715
(608) 251-4843

FIGURE 2.03-2

GEOLOGIC CROSS-SECTION MW-3 TO SB-4

541-926

FILE: 501-\92\G-2 DATE: MAY 02, 2000 - TIME: 4:54 PM - CAD TECH: nolanc

Hermit data logger, and a pressure transducer. The test data was then analyzed using Aqtesolv computer software. Results of the falling head tests indicate aquifer hydraulic conductivities of 0.0069 and 0.00035 feet per minute (ft/min) at wells MW-1 and MW-2, respectively. These estimated hydraulic conductivity values correspond to typical textbook values for clean to silty sand soils (Groundwater, Freeze and Cherry,1979). "Slug test" data is provided as Appendix C.

The groundwater elevations measured at the site on October 5, 1999, ranged from 788.28 to 791.47 feet AMSL. As indicated in Figure 2.03-3, the local direction of groundwater flow appears to be south to southeast with a horizontal hydraulic gradient of approximately 0.07. Table 2.03-1 summarizes the groundwater elevations recorded at the site wells in October 1999 and January 2000.

Table 2.03-1 Groundwater Elevations

	Elevations (ft. AMSL)			
Well Number	Top of Casing	Ground Surface	GW Elevation- Oct. 1999	GW Elevation- Jan. 2000
MW-1	798.62	796.62	789.69	787.04
MW-2	797.5	797.8	791.47	788.01
MW-3	797.68	797.68	789.03	787.55
MW-4	795.53	795.53	788.30	787.09
PZ-1	798.33	798.33	788.28	787.03

3. Hydrology

The site lies at an approximate elevation of 804 feet AMSL. The site areas without buildings are generally asphalt or gravel and the topography is relatively flat. Surface water drainage at the site is to city storm sewers. The storm sewers convey the water to the northwest to the Rock River.

2.04 POTENTIAL RECEPTORS OF CONTAMINATION

In general, underground utility lines may provide preferential pathways for the migration of petroleum contamination. The underground utility lines in the vicinity of the monitoring wells include water, electric, fiber-optic, and storm sewer lines. The manufacturing building adjacent to the

FIL\ 50 55 1\ ac 2. 3.a
DATE: MAY 05, 2000 - TIME: 1:07 PM - CAD TECH: bonnieh

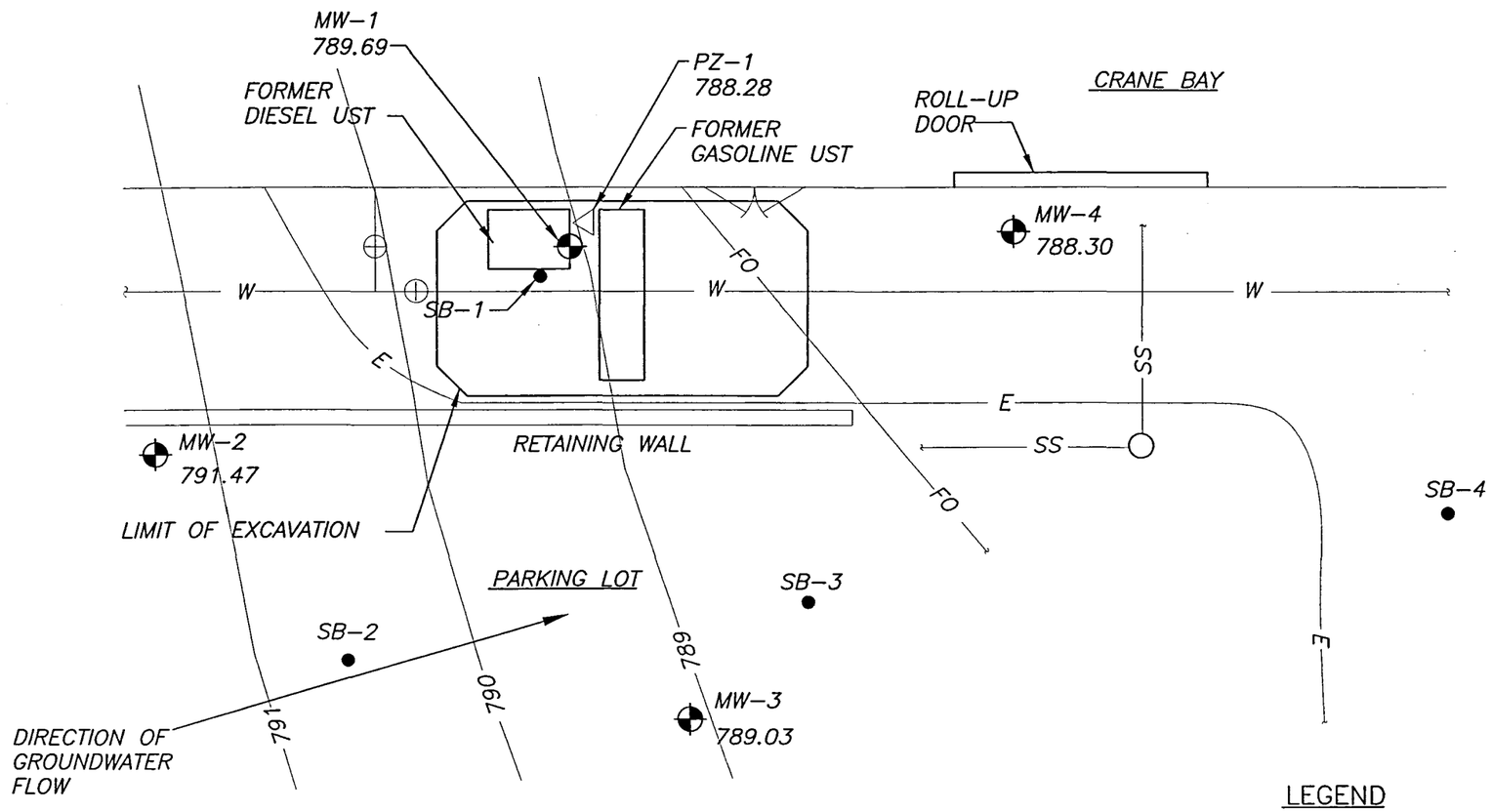

LEGEND

789 — GROUNDWATER CONTOUR LINE

EL. 789.03 — GROUNDWATER ELEVATION

N

SITE PLAN
1"=10'-0"

J-STAR INDUSTRIES
801 JANESVILLE AVENUE
FORT ATKINSON, WISCONSIN

STRAND ASSOCIATES, INC.
ENGINEERS®
910 WEST WINGRA DRIVE
MADISON, WISCONSIN 53715
(608) 251-4843

FIGURE 2.03-3
ELEVATIONS
GROUNDWATER
10-5-99 DATA

contamination source area does not have problems with groundwater infiltration, and no vapors have been noticed inside the building.

The utility lines run generally north-south along the west side of the main manufacturing building into and past the source area. Based on the location of the utility lines, the extent of soil and groundwater contamination at the site, and the groundwater flow direction, preferential contaminant migration via these lines appears possible. Contamination detected in samples from MW-4 suggests contaminant migration along the utility lines may be occurring. Additional investigation of potential impacts to these utility lines does not appear warranted. Future groundwater monitoring at monitoring well MW-4 will provide additional information on the possible preferential migration.

SECTION 3
INVESTIGATION RESULTS AND DISCUSSION

This section presents the results of the field investigations conducted during this study. Investigation field procedures are described in Appendix D.

3.01 FIELD INVESTIGATION SUMMARY

The chronological order in which the field work was conducted at the site is as follows:

Excavation of underground storage tanks and surrounding soils . . . . . August 11,12,&13, 1998

Construction and sampling of soil borings SB-1 through SB-4 . . . . . December 21, 1998

Construction, development, and sampling of monitoring wells MW-1 through MW-4, and piezometer PZ-1 (no groundwater sample collected from MW-3) . . . . . August 30 & 31, 1999

Gauging and surveying of monitoring wells MW-1 through MW-4 and piezometer PZ-1 and groundwater sample collection from MW-3 . . . . . October 5, 1999

Hydraulic conductivity testing performed at monitoring wells MW-1 and MW-2 . . . . . October 5, 1999

Additional sampling of monitoring wells MW-1 through MW-4 and piezometer PZ-1 . . . . . January 26, 2000

3.02 SAMPLING LOCATIONS AND RATIONALE

The Geoprobe boring and monitoring well locations were chosen to assess the vertical and horizontal extent of petroleum contamination in the soil and groundwater. Figure 2.02-1 shows the locations of the Geoprobe borings and the monitoring wells. The investigation was initiated near the former location of the USTs. The approximate former location of the USTs is shown on the Site Plan.

On December 21, 1998, four soil borings were constructed using Geoprobe® - type equipment. Soil samples were collected continuously from the borings for field screening and laboratory analysis. One to two soil samples from each boring were submitted for laboratory analysis for GRO, DRO, VOCs, and lead. One groundwater sample was also collected from each boring and analyzed for VOCs.

On August 30 and 31, 1999, four monitoring wells and one piezometer were constructed. The well locations were selected based on the results of the Geoprobe investigation. Soil samples were generally collected at 2-foot intervals from the wells for field screening and soil description. One groundwater sample from each well was submitted for laboratory analysis of GRO, DRO, PVOCs, and lead.

Groundwater samples were collected from the Geoprobe borings at depths of 8 to 10 feet at borings SB-2 and SB-3, and 16 to 17 feet BGS at borings SB-1and SB-4. Groundwater samples were also collected from the four monitoring wells and the piezometer, each well with 10 feet of slotted screen, intersecting the water table (except for PZ-1 which is screened from 30 to 35 feet BGS). Soil vapor headspace analysis was conducted on all soil samples collected using a Microtip photoionization detector (PID) with a 10.6 electron volt (ev) lamp. For the Geoprobe borings, based on the PID screening results, soil samples were selected for subsequent laboratory analyses. In general, the unsaturated soil sample with the highest PID reading was submitted for analyses. If no elevated PID readings were recorded, the soil sample from the groundwater/soil interface was selected for laboratory analyses.

The soil sample PID screening results are listed in Table 3.02-1 and on the Soil Boring Logs in Appendix B.

3.03 SOIL ANALYTICAL RESULTS

Soil sample analytical results are summarized in Table 3.03-1 and copies of the laboratory reports are included in Appendix E. Soil samples were analyzed for GRO, DRO, VOCs, and lead.

Soil samples that contained concentrations of petroleum-related contaminants above Wisconsin Administrative Code NR 720 Soil Cleanup Guidelines were identified at borings SB-1 and SB-2 (10 to 11.5 feet BGS samples at SB-1 and 2 to 4 feet BGS at SB-2). At Geoprobe boring SB-1, the benzene, toluene, ethylbenzene, total xylene, and GRO concentrations (4,500, 40,000, 12,000, 60,000 micrograms per kilogram (µg/kg), and 930 mg/kg, respectively), exceed the NR 720 Cleanup

Table 3.02-1

Soil Screening Results
J-Star Industries, Inc.
LUST Site Investigation

Depth (ft)	BORING B-1	Depth (ft)	BORING B-2	Depth (ft)	BORING B-3	Depth (ft)	BORING B-4
0-2	6.7	0-2	2.3	0-2	6.2	0-2	*8.8
2-4	6.5	2-4	*9.8	2-4	6.2	2-4	6.9
4-5.5	8.1	4-7	6.9	4-7	6.2	4-7	6.1
5.5-7	1023	7-10	5.2	7-10	7.1	7-10	6.8
7-8.5	286	10-13	6.2	10-13	*7.3	10-13	7
8.5-10	325		EOB		EOB	13-16	6.8
10-11.5	*1083						EOB
11.5-13	82.1						
13-14.5	64.4						
14.5-16	71.5						
16-17.5	*1130						
	EOB						

Notes:

NS - Not Sampled
NR - No Sample Recovered
EOB - End of Boring
* - Soil Sample Submitted for Laboratory Analysis

Table 3.02-1 (cont.)

Soil Screening Results
J-Star Industries, Inc.
LUST Site Investigation

Depth (ft)	BORING MW-1	Depth (ft)	BORING MW-2	Depth (ft)	BORING MW-3	Depth (ft)	BORING MW-4	Depth (ft)	BORING PZ-1
1-3	15.2	1-3	NS	1-3	10.3	1-3	7.0	0-5	NS
3.5-5.5	15.2	3.5-5.5	21.4	3.5-5.5	29.3	3.5-5.5	6.6	6-8	2500
6-8	NS	6-8	21.7	6.8	15.1	6-8	7.2	8.5-10.5	2000
8.5-10.5	220	8.5-10.5	21.2	8.5-10.5	13.3	8.5-9.5	7.3	11-13	300
11-13	210	11-13	22.4	11-13	14.3	10-11	NS	13-28	180
13.5-15.5	25	13.5-15.5	20.6	13.5-15.5	14.3	11-13	2500	29-31	146
16-18	25	16-18	20.7	16-18	22.7	13.5-15.5	753	31.5-33.5	70
18.5-20	45	18.5-20.5	31	18.5-20.5	20.7	16-18	17	34-36	90
	EOB		EOB		EOB	18.5-20	14		EOB
							EOB		

Notes:

NS - Not Sampled
NR - No Sample Recovered
EOB - End of Boring
* - Soil Sample Submitted for Laboratory Analysis

Table 3.03-1

Soil Analytical Results
J-Star Industries, Inc
LUST Site Investigation

Parameter	NR 720 RCL	Boring Number SB-1 10 - 11.5 ft	SB-1 16 - 17 ft	SB-2 2 - 4 ft	SB-3 10 - 13 ft	SB-4 0 - 2 ft	Methanol Blank
DRO, mg/kg	250[1]	120	< 2.7	[76]	< 2.7	< 2.7	NA
GRO, mg/kg	250[1]	930	54	8.8	< 0.91	< 0.91	NA
Lead, mg/kg	[2] 500/50	< 3.8	< 3.9	< 3.8	< 4.1	< 4.7	NA
Detected VOCs, μg/kg:							
Benzene	5.5	4,500	120	21	< 6	< 6	< 6
n-Butylbenzene	-	11,000	480	[36]	< 11	< 11	< 11
sec-Butylbenzene	-	< 1,400	120	< 14	< 14	< 14	< 14
tert-Butylbenzene	-	< 1,500	170	< 15	< 15	< 15	< 15
Ethylbenzene	2,900	12,000	320	39	< 5.4	< 5.4	< 5.4
Isopropylbenzene	-	[1,800]	190	[28]	< 14	< 14	< 14
p-Isopropyltoluene	-	< 1,400	100	[22]	< 14	< 14	< 14
n-Propylbenzene	-	5,200	200	< 14	< 14	< 14	< 14
Xylenes, total	4,100	60,000	580	[71]	< 59	< 59	< 59
Toluene	1,500	40,000	140	58	< 14	< 14	< 14
1,2,4-Trimethylbenzene	-	27,000	250	48	< 14	< 14	< 14
1,3,5-Trimethylbenzene	-	10,000	230	[34]	< 14	< 14	< 14
Methyl- tert- butyl- ether	-	3,600	52	[21]	< 8.6	< 8.6	< 8.6
Naphthalene	[2] 110,000 / 20,000	5,300	82	80	[8.6]	< 12	45
Isopropylether	-	[2,000]	< 10	< 10	< 10	< 10	< 10

Notes: Samples collected December 21, 1998.
[1] Assumes hydraulic conductivity less than 1×10^{-6} cm/s.
[2] NR 720 Standard for industrial/nonindustrial sites.
[ ] Result between Limit of Detection and Quantitation.
RCL Residual Contaminant Level.

NA Not analyzed.
Highlighted Value Exceeds NR 720 RCL.

Guidelines (5.5, 1,500, 2,900, 4,100 µg/kg, and 250 mg/kg). At boring SB-2, the concentration of benzene (21 μg/kg) exceeds applicable NR 720 Cleanup Guidelines.

3.04 GROUNDWATER ANALYTICAL RESULTS

Groundwater samples were collected from Geoprobe borings SB-1 through SB-4 on December 21, 1998. The Geoprobe groundwater samples were analyzed for VOCs only. The Geoprobe groundwater sample results are summarized in Table 3.04-1 and a copy of the analytical report is provided in Appendix E.

Groundwater monitoring wells MW-1 , MW-2, MW-4, and PZ-1 were sampled on August 31, 1999, and again on January 26, 2000. Well MW-3 was sampled on October 5, 1999, and on January 26, 2000. Groundwater samples collected from the monitoring wells in August and October were analyzed for GRO, DRO, and PVOCs, and samples taken on January 26, 2000 were analyzed only for PVOCs. These analytical results are summarized in Table 3.04-2,and copies of the laboratory reports are included in Appendix E. Monitoring well construction and development forms are included in Appendix B.

In the August 1999 samples, petroleum-related groundwater contamination was detected in each monitoring well. The groundwater sample from well PZ-1 had an ES exceedance for benzene (40µg/L) and PAL exceedances for toluene, xylene, and trimethylbenzene (280, 317, and 160 µg/L, respectively). Groundwater samples from wells MW-1, MW-2 and MW-4 had only PAL exceedances for benzene (3.1, 0.77, and 1.2 µg/L, respectively). Other detections were below PALs.

In the January 2000 samples, petroleum-related groundwater contamination was detected in monitoring wells MW-1, MW-4, and PZ-1. Groundwater samples from wells MW-1 and PZ-1 had only PAL exceedances for benzene (0.53, and 2.0 µg/L, respectively). Other detections were below PALs.

3.05 QUALITY ASSURANCE/QUALITY CONTROL

Bailer blanks, trip blanks, duplicate groundwater samples, and methanol blanks, as necessary, were collected and analyzed during groundwater and soil sampling events in accordance with the DNR guidance documents.

A duplicate groundwater sample was collected during the January 2000 sampling from monitoring well MW-3 and analyzed for PVOCs. No PVOCs were detected in the MW-3 or the MW-3 duplicate

Table 3.04-1

Soil Boring Groundwater Analytical Results
J-Star Industries, Inc
LUST Site Investigation

Parameter	NR 140 ES / PAL	Boring Number SB-1	SB-2	SB-3	SB-4	Field Blank
Detected VOCs, μg/L:						
Benzene	5 / 0.5	**2,000**	0.34	0.54	0.78	0.36
Bromodichloromethane	0.6 / 0.06	< 0.081	< 0.081	[0.1]	< 0.081	< 0.081
Bromoform	4.4 / 0.44	< 0.089	< 0.089	[0.18]	< 0.089	< 0.089
Dibromochloromethane	60 / 6	< 0.11	< 0.11	[0.18]	< 0.11	< 0.11
n-Butylbenzene	--	43	< 0.064	< 0.064	< 0.064	< 0.064
sec-Butylbenzene	--	240	< 0.063	< 0.063	< 0.063	< 0.063
tert-Butylbenzene	--	[9.2]	< 0.055	< 0.055	< 0.055	< 0.055
Methylene Chloride	5 / 0.5	< 0.13	< 0.13	< 0.13	< 0.13	0.96
Ethylbenzene	700 / 140	140	0.94	0.33	0.26	0.29
Isopropylbenzene	--	[11]	< 0.059	< 0.059	< 0.059	< 0.059
n-Propylbenzene	--	48	< 0.052	< 0.052	< 0.052	< 0.052
Trichloroethene	5 / 0.5	<0.099	<0.099	<0.099	<0.099	1.2
Xylenes, total	620 / 124	**630**	[0.33]	1.72	1.35	1.23
Toluene	343 / 68.6	**1,200**	0.49	2	2.2	2.8
Trimethylbenzenes, total	480 / 96	111	< 0.16	0.65	0.35	< 0.25
MTBE	60 / 12	< 8.6	[0.22]	< 0.086	< 0.086	< 0.086
Naphthalene	40 / 8	< 39	< 0.39	[0.44]	< 0.39	2

Notes: Samples collected December 21, 1998.
[ ] Result between Limit of Detection and Quantitation.
ES Enforcement Standard.
PAL Preventive Action Limit.
MTBE Methyl-tert-butyl-ether.
Highlighted Value Exceeds NR 140 PAL.
Bold Bold Value Exceeds NR 140 ES.

Table 3.04-2

Monitoring Well Groundwater Analytical Results
J-Star Industries, Inc
LUST Site Investigation

Parameter	NR 140 ES/PAL	MW-1 8/31/99	MW-1 1/26/00	MW-2 8/31/99	MW-2 1/26/00	MW-3 10/5/99	MW-3 1/26/00	MW-4 8/31/99	MW-4 1/26/00	PZ-1 8/31/99	PZ-1 1/26/00
Lead - Dissolved, μg/L		< 2.8	NA	< 2.8	NA	< 2.8	NA	3.1	NA	< 2.8	NA
Diesel Range Organics (DRO), μg/L		160	NA	180	NA	120	NA	1,600	NA	540	NA
Gasoline Range Organics (GRO), μg/L		82	NA	< 50	NA	< 50	NA	700	NA	2,300	NA
Detected PVOCs, μg/L:											
Benzene	5/0.5	3.1	0.53	0.77	< 0.10	< 0.26	< 0.10	1.2	< 0.10	**40**	2
Ethylbenzene	700/140	5.2	< 0.10	< 0.24	< 0.10	< 0.24	< 0.10	9	< 0.10	64	5.7
Xylenes, total	620/124	16.4	< 0.40	< 1.34	< 0.40	< 1.34	< 0.40	15	3.4	317	< 1.08
Toluene	343/ 68.6	6	< 0.10	0.45	< 0.10	< 0.21	< 0.10	8.9	11	280	1.6
Trimethylbenzenes, total	480/96	7.3	< 0.20	< 1.40	< 0.20	< 1.40	< 0.20	6.4	< 0.83	160	16.4
MTBE	60/12	< 0.22	< 0.10	< 0.22	< 0.10	< 0.22	< 0.10	< 0.22	< 0.10	2.9	< 0.10

Notes:
[ ] Result between Limit of Detection and Quantitation.
ES Enforcement Standard.
PAL Preventive Action Limit.
MTBE Methyl-tert-butyl-ether.
Highlighted Value Exceeds NR 140 PAL.
Bold Bold value Exceeds NR 140 ES
NA Not Analyzed

PAL is [illegible] RJS 10/29/01

samples. A bailer blank taken during this sampling trip contained 0.59 µg/L of toluene. This detection of toluene does not appear to be significant since the sample taken immediately prior to and the sample taken immediately after the bailer blank was taken shows no detection of toluene.

For December 1998 sampling, the MeOH blank contained 45 µg/kg of napthalene, which was also present in several of the soil samples and one water sample taken at the site. The trip blank showed no detections of VOCs. The tubing blank contained benzene at 0.36 µg/L, ethylbenzene at 0.29 µg/L, methylene chloride at 0.96 µg/L, napthalene at 2.0 µg/L, toluene at 2.8 µg/L, trichloroethene at 1.2 µg/L, xylenes at 1.23 µg/L, and 1,2,4 trimethylbenzene at 0.19 µg/L (below the limit of quantization of 0.26 µg/kg). All of these contaminants, except trichloroethene and methylene chloride, are present in groundwater samples from the site.

A bailer blank taken during the August 1999 sampling event contained toluene at 0.25 µg/L, which is below the limit of quantitation of 0.67 µg/L. This detection of toluene does not appear to be significant, since all of the samples taken either did not have detections of toluene or contained toluene at levels greater than 0.25 µg/L. The trip blank from this trip had no detections of GRO or PVOCs.

Quality assurance sample results are included with sample results in Appendix E and field investigation and decontamination procedures are discussed in Appendix D.

3.06 DISCUSSION

A. Extent of Soil Contamination

Soil contamination exceeding the NR 720 Soil Cleanup Guidelines was detected at borings SB-1(10 to 11.5 feet and 16 to 17 feet BGS), and SB-2 (2 to 4 feet BGS). The horizontal extent of soil contamination appears to extend from the area of SB-1 where the gasoline and diesel USTs were located to some point near monitoring well MW-4. It is likely that soil contamination extends a short distance beneath the western end of the J - Star Industries building. The estimated horizontal extent of soil contamination is shown on Figure 3.06-1.

Vertically, soil contamination extends to the depth of the groundwater table (approximately 6 to 10 feet BGS), with elevated PID readings present throughout the saturated and unsaturated sandy layer in the area of the source, to a depth of about 17 feet BGS. Soil sample PID readings are presented in Table 3.02-1 and on the Soil Boring Logs in Appendix B. A copy of the soil sample laboratory report is provided in Appendix E.

FILE: S:\@Sai\501--550\541\926\acad\5-5-00\3.06-1.dwg
DATE: MAY 05, 2000 - TIME: 11:27 AM - CAD TECH: bonnieh

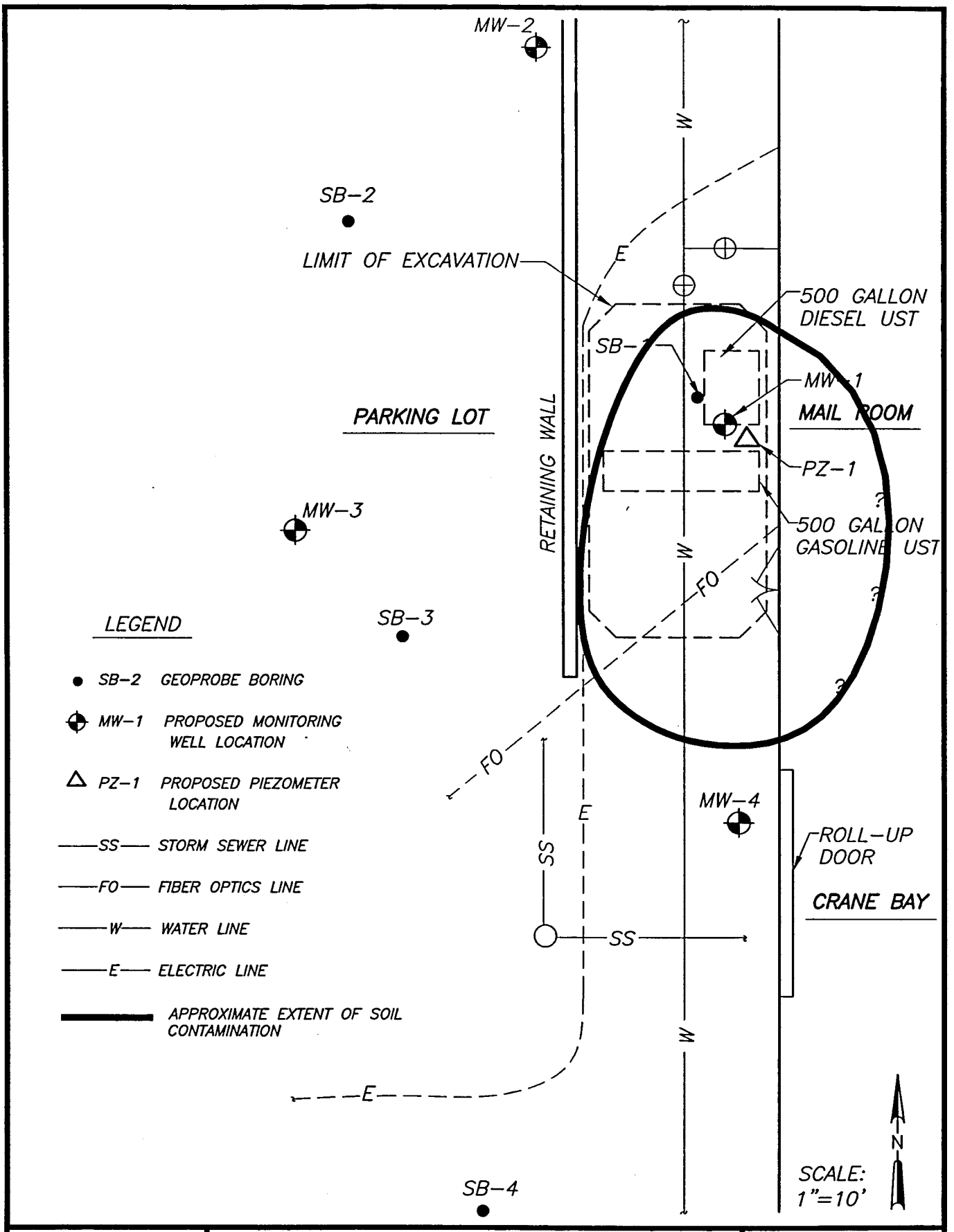

FIGURE 3.06-1	J-STAR INDUSTRIES 801 JANESVILLE AVENUE FORT ATKINSON, WISCONSIN ESTIMATED SOIL CONTAMINATION	STRAND ASSOCIATES, INC. ENGINEERS
541-926		

B. Extent of Groundwater Contamination

Groundwater samples collected during the 1998 installation of soil borings (SB-1 through SB-4) showed petroleum-related groundwater contamination exceeding NR 140 PALs and/or ESs at borings SB-1, SB-3, and SB-4.

PAL and/or ES exceedances were also found in groundwater samples collected in 1999 at monitoring wells MW-1, MW-2, MW-4, and PZ -1.

In January 2000, petroleum-related groundwater contamination exceeding NR 140 PALs and/or ESs was only detected at monitoring wells MW-1 and PZ-1.

Based on this information, it appears that groundwater contamination extends to the area between MW-4 and SB-4. Comparison of PVOC sampling results from August 1999 and January 2000 for MW-1, MW-4, and PZ-1 shows that since the removal of the source USTs, the plume of petroleum-related contamination may be decreasing in both extent and magnitude. The results of the most recent sampling event indicate that the current extent of contamination is limited to the immediate vicinity of the source excavation. Figure 3.06-2 shows the estimated horizontal extent of groundwater contamination.

The low-level groundwater contamination detected at MW-2 and SB-3 appears to be unrelated to the source USTs, since MW-2 and SB-3 are located significantly up-gradient. The source may be localized contamination stemming from the fact that these locations are in the middle of a parking area.

FILE: S:\@Sai\501--550\541\926\acad\5-5-00\3.06-2.dwg
DATE: MAY 05, 2000 - TIME: 11:29 AM - CAD TECH: bonnieh

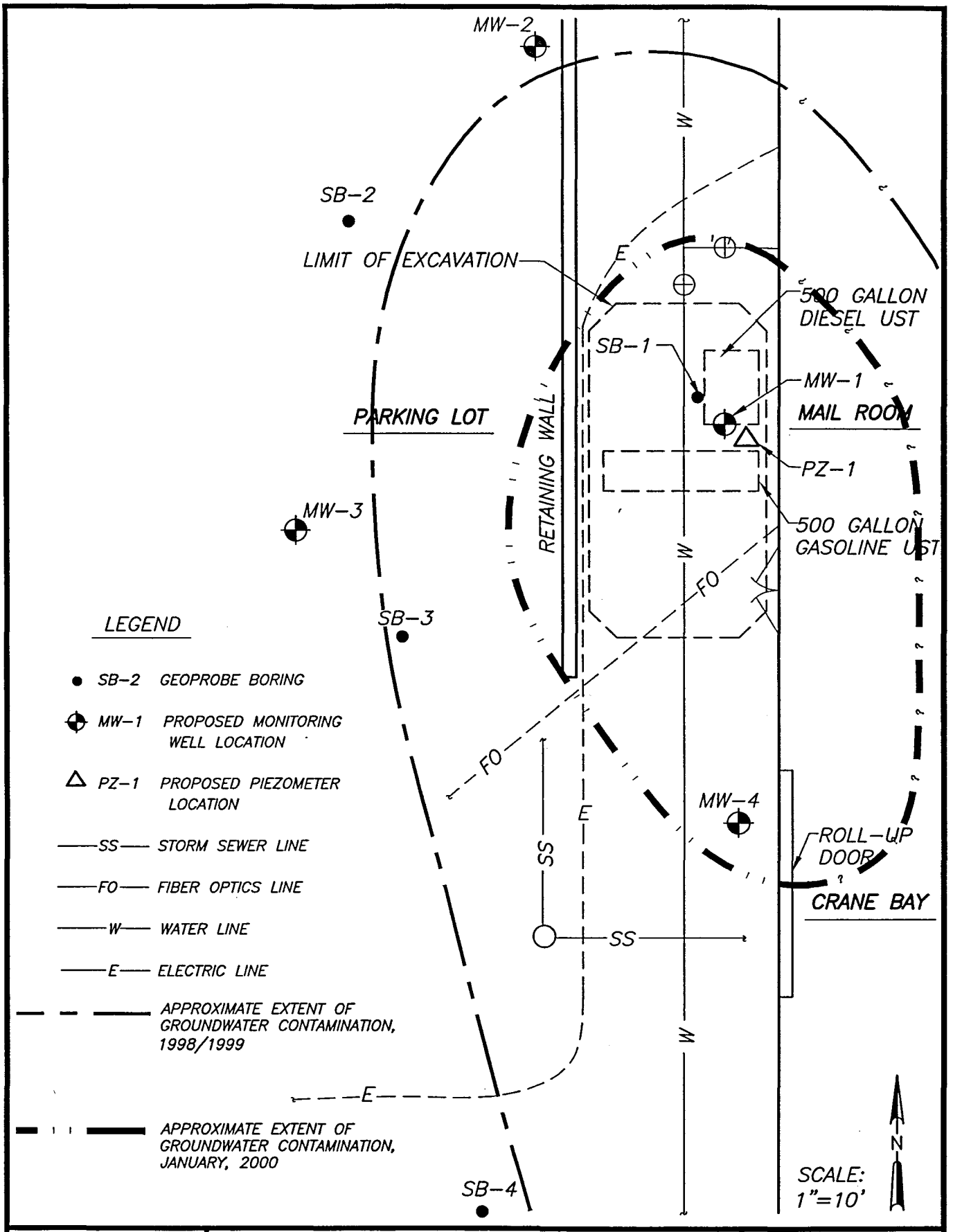

FIGURE 3.06-2	J-STAR INDUSTRIES 801 JANESVILLE AVENUE FORT ATKINSON, WISCONSIN ESTIMATED GROUNDWATER CONTAMINATION	STRAND ASSOCIATES, INC. ENGINEERS
541-926		

SECTION 4
CONCLUSIONS AND RECOMMENDATIONS

4.01 CONCLUSIONS

Based on soil screening and analytical results, it appears that approximately 50 to 100 cubic yards (CY) of unsaturated soil impacted by petroleum releases may remain at the site. It appears that approximately half of this volume is located beneath the J - Star Industries building.

Results of the Geoprobe and monitoring well sampling indicate that groundwater has been impacted by petroleum products above NR 140 ESs. The contaminant plume currently appears to extend from the UST source area (at SB-1, MW-1, and PZ-1) south to the area of MW-4.

4.02 POTENTIAL REMEDIATION ALTERNATIVES

A. Soil Remediation

Potential soil remediation alternatives reviewed for the site include natural attenuation, enhanced bioremediation, soil vapor extraction, and excavation with on-site biopile treatment. A discussion of these alternatives follows.

1. Natural Attenuation

Leaving the soil at the site undisturbed is a form of remediation that depends upon the natural assimilative processes of volatilization and biodegradation. Typically, the DNR will not allow selection of this approach if the contaminated soil is a continuing source of groundwater contamination when the groundwater plume is not stable or receding or if the groundwater plume has the potential to threaten public health and safety or the environment. In this case, there is no data beyond the original soil borings on the extent of soil contamination. However, the groundwater plume appears to be stable or receding. Even though the site soil in the immediate source area is highly contaminated and in contact with the shallow groundwater, the decline of the groundwater plume concentrations indicates that the soil contamination is likely also stable or decreasing and will not present a major concern in future years. For these reasons, natural attenuation is feasible.

2. Enhanced Bioremediation

Biological treatment is an engineered process which takes advantage of natural microorganisms which degrade petroleum products to carbon dioxide and water. Bioremediation in the unsaturated soils could be accelerated by enhancing the subsurface environment through addition of oxygen, moisture, or other nutrients. Commercially available oxygen release products are now available that can be injected into the contaminated soil area to promote contaminant degradation. Nutrient injection is generally performed in a grid pattern over the contaminated area. Injection at this site could likely be accomplished with Geoprobe equipment.

3. Soil Vapor Extraction

The technique of vapor extraction is based on volatilization of VOCs from interstitial pore spaces. Forced air flow through these spaces promotes adsorbed compounds to reach equilibrium concentration with the clean air. The air is then collected by a network of piping to a vacuum pump. Often these systems will have a blower connected to a network of feeder wells and a separate collection pipe system with an attached vacuum pump. The extracted soil gasses are vented to the surface where they are exhausted to the atmosphere or treated to remove hydrocarbons before discharge. This remediation process may not work well at this site since the unsaturated zone soil, contaminated with volatile compounds, is generally a sandy or silty clay. This would increase the number of vapor extraction wells required and/or the size of blowers and vacuum pumps necessary to volatilize the contamination.

4. Excavation and On-Site Biopiling

If the site is large enough and the property owner is receptive to this option, excavation and on-site biopiling of contaminated soil can be a very cost-effective option. At this site there is sufficient area for biopiling. This option would involve excavation of accessible contaminated soil, stockpiling the soil on an impervious, bermed surface, covering the biopile to prevent erosion and runoff, and enhancing the natural biological remediation of the soil through the addition of an electron donor such as oxygen, moisture, and nutrients.

This option is appealing because of its low cost. However, in this case a large portion of the site's contaminated soil may not be accessible by excavation. Also, the process would probably interfere with day-to-day operations at the site. Much of the contaminated area is in front of a loading bay, and excavation would disrupt truck traffic at the site.

B. Groundwater Remediation

Potential groundwater remediation alternatives for the site include natural attenuation, enhanced bioremediation, and extraction/treatment. These alternatives are discussed below.

1. Natural Attenuation

The natural attenuation alternative depends upon the natural assimilative processes of biodegradation, volatilization, dispersion, and adsorption. When groundwater parameters indicate site conditions are favorable for natural biodegradation of the contamination, the DNR typically allows natural attenuation when the groundwater plume is stable or receding and public health and safety or the environment are not threatened. It does not appear that public health and safety or the environment are being threatened by the groundwater plume at this time. Based on the results of the latest sampling event, the plume appears to be receding. The DNR typically recommends quarterly groundwater monitoring for a period of two years and then assessment of whether natural attenuation is a feasible remediation option.

2. Enhanced Bioremediation

Biological treatment is an engineered process which takes advantage of natural microorganisms which degrade petroleum products to carbon dioxide and water. This option could utilize groundwater extraction and on-site treatment followed by nutrient enhancement of the treated groundwater and injection of the water to the aquifer to promote bioremediation. Biological treatment could also be conducted without active groundwater extraction and treatment. Nutrients could be injected into the saturated and/or unsaturated zone soils. The progress of bioremediation could then be monitored through a groundwater monitoring program.

3. Extraction/Treatment

Recovery and treatment of contaminated groundwater has been used effectively for many years. Proper placement of the recovery wells and adequate pumping rates result in containment of the waste plume. The recovery well's zone of influence will cause the plume to migrate toward the well for withdrawal and subsequent treatment.

Many types of groundwater treatment processes exist. Air stripping, granular activated carbon, and biological treatment are the most widely used technologies. Other types of

processes include steam stripping, reverse osmosis, oxidation/reduction reaction, neutralization, precipitation, flocculation, sedimentation, and other treatment alternatives. These additional processes are not commonly used for typical petroleum pollution events.

Groundwater extraction and treatment is typically not required unless the groundwater plume is advancing, is threatening, or has the potential to threaten public health, safety, or the environment, or if free product is present.

4.03 RECOMMENDED REMEDIATION ALTERNATIVE

According to Comm 47.33, the lowest-cost remediation alternative which is acceptable to the DNR shall be selected. If a higher cost alternative is selected, the difference in costs will not be reimbursable under the PECFA program.

Selection of technically and economically feasible remediation options was influenced by both on-site and off-site characteristics. The site characteristics that influenced the selection include:

1. High soil contaminant concentrations with a small area of soil contamination that may extend beneath building.
2. Decreasing groundwater contaminant concentrations.
3. No private water wells near the site.
4. Groundwater plume is contained well within the site.
5. Soil type (generally sandy or silty clay over a layer of sand and gravel).
6. Current land use (industrial site surrounded by industrial and residential properties).

Based on the above site factors and the discussion, we recommend the following plan of action:

Analytical data indicates that natural attenuation would be feasible for closure of the site. One to two additional years of quarterly groundwater sampling should be done to verify the decreasing extent and magnitude of contamination.

Consideration of the feasible soil remediation alternatives in combination with the feasible groundwater remediation alternative reveals that Option No. 1 on Table 4.03-1 is the lowest-cost feasible option. Option No. 1 uses natural attenuation for remediation of the soil and groundwater contamination. The other soil and groundwater remediation combinations are shown in Table 4.03-1 (Options No. 2 through No. 10). As the table indicates, the other options are not the lowest-cost combinations and, therefore, will not be considered further.

Soil Remediation

Use of natural attenuation is recommended. We estimate that a majority of impacted soils were removed during the previous source area excavation and UST removals. Through the processes of biodegradation and dispersion, remaining impacted soils will be able to be remediated so that any remaining contamination will be below allowable levels. Because continuing monitoring would be of groundwater samples, there is no cost associated with the natural attenuation of site soils.

Groundwater Remediation

Evaluation of the groundwater plume for potential remediation via natural attenuation is recommended. The preliminary groundwater plume evaluation and subsequent remediation via natural attenuation is the lowest-cost, feasible alternative. Natural attenuation appears to be feasible on a preliminary basis since the current extent of groundwater contamination has been defined, there is no evidence that the plume threatens public health, safety, or the environment, and the extent of the plume appears to be shrinking.

We recommend quarterly groundwater monitoring for a period of one to two years in order to collect data for evaluation of the feasibility of remediation via natural attenuation. We recommend assessment of the petroleum contamination plume stability in the groundwater through analysis for PVOCs. Each of the four site monitoring wells and one piezometer will be sampled quarterly for these parameters. The groundwater plume's natural attenuation potential will be evaluated through analysis for oxidation/reduction potential, pH, temperature, conductivity, sulfate, iron, nitrate/nitrite, dissolved oxygen, and methane/ethane/ethene. These parameters will be tested for at each of the site's monitoring wells and at the one piezometer.

The monitoring results will be submitted to the Department annually in a brief letter report. After collecting one year of quarterly monitoring data, the data will be summarized and recommendations for additional monitoring, active remediation, or implementation of natural attenuation as the final remediation option and site closure request will be made. The estimated cost for quarterly monitoring and reporting for one year, assessment of natural attenuation, and site closure request is shown in Table 4.03-1 as Option No. 1.

4.04 SCHEDULE AND ESTIMATED TOTAL COST

Assuming this plan is approved by the DNR and/or the Department of Commerce, evaluation of natural attenuation and site closure request, following the one to two years of monitoring, can be completed in the fall of 2001 to fall of 2002. The estimated total cost for the selected remediation option is $40,000 (Option No. 1 in Table 4.03-1).

TABLE 4.03-1

FEASIBLE REMEDIATION ALTERNATIVES
OPINION OF PROBABLE COST

J - Star Industries
801 Janesville Ave.
Fort Atkinson, Wisconsin

	Option	Opinion of Probable Cost to Obtain Site Closure
1.	Soil: Natural Attenuation Groundwater: Natural Attenuation (assumes 2 years quarterly groundwater monitoring, natural attenuation assessment, and site closure request)	$40,000
2.	Soil: Enhanced Bioremediation Groundwater: Natural Attenuation (assumes 2 years enhanced bioremediation with quarterly groundwater monitoring, and site closure request)	$225,000
3.	Soil: Enhanced Bioremediation Groundwater: Enhanced Bioremediation (assumes 5 years annual monitoring)	$340,000
4.	Soil: Enhanced Bioremediation Groundwater: Extraction/Treatment [assumes 8 years operation and maintenance (O&M)]	$450,000

	Option	Opinion of Probable Cost to Obtain Site Closure
5.	Soil: Soil Vapor Extraction Groundwater: Natural Attenuation (assumes 6 years O&M and groundwater monitoring, quarterly for years 1 and 2 and annual thereafter)	$300,000
6.	Soil: Soil Vapor Extraction Groundwater: Enhanced Bioremediation (assumes 6 years O&M and annual groundwater monitoring for 5 years)	$415,000
7.	Soil: Soil Vapor Extraction Groundwater: Extraction/Treatment (assumes 8 years operation and maintenance)	$525,000
8.	Soil: Excavation and Biopiling Groundwater: Natural Attention (assumes 2 years quarterly groundwater monitoring, natural attenuation assessment, and site closure request)	$160,000
9.	Soil: Excavation and Biopiling Groundwater: Enhanced Bioremediation (assumes 5 years annual groundwater monitoring)	$270,000
10.	Soil: Excavation and Biopiling Groundwater: Extraction/Treatment (assumes 8 years operation and maintenance)	$380,000

APPENDIX A

PREVIOUS INVESTIGATION RESULTS

FAX

Date 08/13/98 7:52 AM

Number of pages including cover sheet 3

TO: Mark Butorac
J-Star Industries

Phone 920-563-5521
Fax Phone 920-563-2089

CC:

FROM: Robyn Seymour
Seymour Environmental Services, Inc.
P.O. Box 398
McFarland, WI 53558-0398

Phone 608-838-9120
Fax Phone 608-838-9121

REMARKS: ☐ Urgent ☒ For your review ☐ Reply ASAP ☒ Please Comment

Mr. Butorac:

I am forwarding the results of the first sample that was collected near the tanks last week. The Wisconsin Department of Natural Resources (WDNR) clean-up guidelines for both Diesel Range Organics (DRO) and Gasoline Range Organics (GRO) are 100 mg/kg for sandy soil and 250 for tight clay soils. I expect you will forward these to your attorney to report to the WDNR. If you would prefer it, I can forward the necessary paperwork, just let me know. I will be out of the office from about 9:30-12:00. I am coming back down to your site in the early afternoon.

Sincerely,

Robyn

Robyn Seymour

EN CHEM INC.
1795 Industrial Drive
Green Bay, WI 54302
920-469-2436
800-7-ENCHEM
Fax: 920-469-8827

- Preliminary Analytical Report -

Project Name : J-STAR
Project Number :
Client : SEYMOUR ENVIRONMENTAL SERVICES
Field ID : CONFIRMATION
Report Date : 8/12/98
Lab Sample Number : 884746-001
Collection Date : 8/6/98
WI DNR LAB ID : 405132750
Matrix Type : SOIL

Inorganic Results

Test	Result	LOD	LOQ	EQL	Units	Code	Analysis Date	Prep Method	Analysis Method	Initials
SOLIDS, PERCENT	83.8				%		8/10/98	SM2540G	SM2540G	DJB

Organic Results

Preservation Date: 8/10/98

DIESEL RANGE ORGANICS - SOIL Prep Method: WI MOD DRO Prep Date: 8/10/98

Analyte	Result	LOD	LOQ	EQL	Units	Code	Analysis Date	Analysis Method	Analyst:
DIESEL RANGE ORGANICS	230			7.9	mg/kg		8/10/98	WI MOD DRO	DJB
Blank spike	89			50	%Recov		8/10/98	WI MOD DRO	DJB
Blank spike duplicate	87			50	%Recov		8/10/98	WI MOD DRO	DJB
Blank	< 5.0			5.0	mg/kg		8/10/98	WI MOD DRO	DJB

Organic Results

GASOLINE RANGE ORGANICS - SOIL/METHANOL Prep Method: WI MOD.GRO Prep Date: 8/10/98

Analyte	Result	LOD	LOQ	EQL	Units	Code	Analysis Date	Analysis Method	Analyst:
Gasoline Range Organics	1700			75	mg/kg		8/11/98	WI MOD GRO	EGS
Blank Spike	101			1.00	%Recov		8/11/98	WI MOD GRO	EGS
Blank Spike Duplicate	108			1.00	%Recov		8/11/98	WI MOD GRO	EGS
Blank	< 2.5			2.5	mg/kg		8/11/98	WI MOD GRO	EGS

All soil results are reported on a dry weight basis unless otherwise noted.

QUICKTAT * 3201 *

RA

Company Name: Seymour Env.
Branch or Location:
Project Contact: Robyn Seymour
Telephone: 608 838 9120
Project Number:
Project Name: J-Star
Project Location: Ft. Atkinson, WI
Sampled By (Print): Robyn Seymour
Regulatory Program (circle): DST RCRA CLP SDWA NPDES/WPDES CAA NR____ Other
NR720 Confirmation Analysis Required? (circle) Y N
(En Chem will not confirm unless otherwise instructed.)

EN CHEM INC.
1241 Bellevue St., Suite 9, Green Bay, WI 54302, 920-469-2436 • 1-800-735-2436, FAX 920-469-8827
602 Deming Way, Madison, WI 53717, 608-827-5501 • 1-888-636-2436, Fax: 608-827-5500
1823 N. 8th Street, Suite 122, Superior, WI 54880, 715-392-1844 • 1-800-837-8228, FAX 715-392-5843

CHAIN OF CUSTODY

18789

Page ____ of ____
P.O. # ____ Quote # ____
Mail Report To: Robyn Seymour
Company: Seymour Env.
Address: 2531 Dyreson Rd, McFarland, WI
Invoice To: Mark Bladel
Company: J-Star Ind.
Address: 801 Janesville Ave, Fort Atkinson, WI 53538
Mail Invoice To: R. Seymour

8/12/98

FILTERED? (YES/NO)
PRESERVATION (CODE)*

ANALYSES REQUESTED: DRO, GRO

FIELD ID	SAMPLE DESCRIPTION	COLLECTION DATE	COLLECTION TIME	DRO	GRO	FIELD DEPTH	MATRIX	GOOD COND.	TOTAL BOTTLES	COMMENTS	LABORATORY NUMBER
	Confirmation	8/6	Am	X	X			✓	1	28 M 1 2oz jar 1404	001
	MeOH Bl	1	1		X					not received MAA 8/10/98	

SHADED AREA FOR LABORATORY USE ONLY

884746 60

*Preservation Code: A=None B=HCL C=H2SO4 D=HNO3 E=EnCore F=Methanol** G=NaOH O=Other (indicate)

**If not using En Chem's methanol, indicate volume of methanol added and mark the appropriate samples.

Relinquished By:	Date/Time:	Received By:	Date/Time:
Robyn Seymour	8/7	[illegible]	8-7-98 04:00
[illegible]	8-7-98 1215	[illegible]	8/7/98 1275
[illegible]	8/7/98 1600		
		Received By (En Chem): [illegible]	8/7/98 1100

En Chem Project No. ~~584748~~
Sample Receipt Temp. ROI
Sample Receipt pH (water only)

Ampe Excavating, Inc.
2417 VONDRON ROAD MADISON, WISCONSIN 53704
(608) 222-7584 FAX (608) 222-3479

September 21, 1998

J-Star Industries
801 Janesville Ave.
Fort Atkinson, WI 53538
Mr Mark Butorac

Mr Butorac:

Enclosed are your copies of the Checklist For Tank Closure and Underground Petroleum Product Tank Inventory forms from the tank removal. Please hold on to these forms for your records.

If you have any questions please feel free to contact us at 608/222-7584.

Thank You,

Sandy Morgan
Ampe Excavating, Inc.

Complete one form for each site closure.

The information you provide may be used by other government agency programs [Privacy Law, s.15.04 (1)(m)].

CHECKLIST FOR TANK CLOSURE

CHECK ONE:
☒ UNDERGROUND
☐ ABOVEGROUND
FOR PORTIONS OF THE FORM THAT DO NOT APPLY, CHECK THE N/A BOX

RETURN COMPLETED CHECKLIST TO:
Wisconsin Department of Commerce
ERS Division
Bureau of Storage Tank Regulation
P.O. Box 7969
Madison, WI 53707

A. IDENTIFICATION: (Please Print) Indicate whether closure is for: ☒ Tank System ☐ Tank Only ☐ Piping Only

1. Site Name: J-Star Industries	2. Owner Name: J Star Industries
Site Street Address (not P.O. Box): 801 Janesville Ave	Owner Street Address: 801 Janesville Ave
☒ City: Fort Atkinson ☐ Village ☐ Town of:	☐ City: Fort Atkinson ☐ Village ☐ Town of: State: WI Zip Code: 53538
State: WI Zip Code: 53538 County: Jefferson	County: Jefferson Telephone No. (include area code): (920) 563-2494
Closure Company Name (print): Alpe Excavating Inc	Closure Company Street Address: 2417 Von Bron Rd
Closure Company Telephone No. (include area code): ( )	Closure Company City, State, Zip Code: Madison WI 53718
Name of Company Performing Closure Assessment: [illegible]	Assessment Company Street Address, City, State, Zip Code: [illegible] Road, [illegible], WI 53558
Telephone # (include area code): [illegible]	Certified Assessor Name (print): [illegible] Assessor Signature: [illegible] Assessor Certification No.: 41550

Tank ID #	Closure	Temp. Closure	Closure in Place	Tank Capacity	Contents*	Closure Assessment
1.	☒	☐	☐	500	Gas	☐Y ☐N
2.	☒	☐	☐	500	Diesel	☐Y ☐N
3.	☐	☐	☐			☐Y ☐N
4.	☐	☐	☐			☐Y ☐N
5.	☐	☐	☐			☐Y ☐N
6.	☐	☐	☐			☐Y ☐N

Indicate which product by numeric code: 01-Diesel; 02-Leaded; 03-Unleaded; 04-Fuel Oil; 05-Gasohol; 06-Other:_____; 10-Premix; 11-Waste Oil; 13-Chemical (indicate the chemical name(s) or number(s) _____ _____ _____; 14-Kerosene; 15-Aviation.

Written notification was provided to the local agent 15 days in advance of closure date. ☒Y ☐N ☐NA
All local permits were obtained before beginning closure. ☒Y ☐N ☐NA

Check applicable box at right in response to all statements in Sections B-E.

	Remover Verified	Inspector Verified	NA
B. TEMPORARILY OUT OF SERVICE			
Written inspector approval of temporary closure obtained, which is effective until (provide date) _____	☐Y ☐N	☐	☒
1. Product Removed			
a. Product lines drained into tank (or other container) and resulting liquid removed, AND	☐Y ☐N	☐	☒
b. All product removed to bottom of suction line, OR	☐Y ☐N	☐	☒
c. All product removed to within 1" of bottom.	☐Y ☐N	☐	☒
2. Fill pipe, gauge pipe, tank truck vapor recovery fittings, and vapor return lines capped.	☐Y ☐N	☐	☒
3. All product lines at the islands or pumps located elsewhere are removed and capped, OR	☐Y ☐N	☐	☒
4. Dispensers/pumps left in place but locked and power disconnected.	☐Y ☐N	☐	☒
5. Vent lines left open.	☐Y ☐N	☐	☒
6. Inventory form filed indicating temporary closure.	☐Y ☐N	☐	☒
C. CLOSURE BY REMOVAL			
1. Product from piping drained into tank (or other container).	☒Y ☐N	☒	☐
2. Piping disconnected from tank and removed.	☒Y ☐N	☒	☐
3. All liquid and residue removed from tank using explosion proof pumps or hand pumps.	☒Y ☐N	☒	☐
4. All pump motors and suction hoses bonded to tank or otherwise grounded.	☒Y ☐N	☒	☐
5. Fill pipes, gauge pipes, vapor recovery connections, submersible pumps and other fixtures removed.	☒Y ☐N	☒	☐
NOTE: DROP TUBE SHOULD NOT BE REMOVED IF THE TANK IS TO BE PURGED THROUGH THE USE OF AN EDUCTOR.			
6. Vent lines left connected until tanks purged.	☒Y ☐N	☒	☐
7. Tank openings temporarily plugged so vapors exit through vent.	☒Y ☐N	☒	☐
8. Tank atmosphere reduced to 10% of the lower flammable range (LEL) - see Section F.	☒Y ☐N	☒	☐
9. Tank removed from excavation after PURGING/INERTING; placed on level ground and blocked to prevent movement.	☒Y ☐N	☒	☐
10. Tank cleaned before being removed from site.	☒Y ☐N	☒	☐

- CONTINUE ON NEXT PAGE -

CLOSURE BY REMOVAL (continued)

	Remover Verified		Inspector Verified	NA
11. Tank labeled in 2" high letters after removal but before being moved from site.	☒Y	☐N	☒	☐
NOTE: COMPLETE TANK LABELING SHOULD INCLUDE WARNING AGAINST REUSE; FORMER CONTENTS; VAPOR STATE; VAPOR FREEING TREATMENT; DATE.				
12. Tank vent hole (1/8" in uppermost part of tank) installed prior to moving the tank from site.	☒Y	☐N	☒	☐
13. Inventory form ERS-7437 filed by owner with the Department of Commerce indicating closure by removal.	☒Y	☐N	☒	☐
14. Site security is provided while the excavation is open.	☒Y	☐N	☒	☐

CLOSURE IN PLACE

NOTE: CLOSURES IN PLACE ARE ONLY ALLOWED WITH THE PRIOR WRITTEN APPROVAL OF THE DEPARTMENT OF COMMERCE OR LOCAL AGENT.

1. Product from piping drained into tank (or other container).	☐Y	☐N	☐	☒
2. Piping disconnected from tank and removed.	☐Y	☐N	☐	☒
3. All liquid and residue removed from tank using explosion proof pumps or hand pumps.	☐Y	☐N	☐	☒
4. All pump motors and suction hoses bonded to tank or otherwise grounded.	☐y	☐N	☐	☒
5. Fill pipes, gauge pipes, vapor recovery connections, submersible pumps and other fixtures removed.	☐Y	☐N	☐	☒
NOTE: DROP TUBE SHOULD NOT BE REMOVED IF THE TANK IS TO BE PURGED THROUGH THE USE OF AN EDUCTOR - EDUCTOR OUTPUT 12 FT. ABOVE GRADE.				
6. Vent lines left connected until tanks purged.	☐Y	☐N	☐	☒
7. Tank openings temporarily plugged so vapors exit through vent.	☐Y	☐N	☐	☒
8. Tank atmosphere reduced to 10% of the lower flammable range (LEL) see Section F.	☐Y	☐N	☐	☒
9. Tank properly cleaned to remove all sludge and residue.	☐Y	☐N	☐	☒
10. Solid inert material (sand, cyclone boiler slag, pea gravel recommended) introduced and tank filled.	☐Y	☐N	☐	☒
11. Vent line disconnected or removed.	☐Y	☐N	☐	☒
12. Inventory form filed by owner with the Department of Commerce indicating closure in place.	☐Y	☐N	☐	☒

CLOSURE ASSESSMENTS

NOTE: DETERMINE IF A CLOSURE ASSESSMENT IS REQUIRED BY REFERRING TO ILHR 10.

1. Individual conducting the assessment has a closure assessment plan (written) which is used as the basis for their work on the site.	☐Y	☒N	☐	☐
2. Do points of obvious contamination exist?	☒Y	☐N	☒	☐
3. Are there strong odors in the soils?	☒Y	☐N	☒	☐
4. Was a field screening instrument used to pre-screen soil sample locations?	☒Y	☐N	☐	☐
5. Was a closure assessment omitted because of obvious contamination?	☒Y	☐N	☐	☐
6. Was the DNR notified of suspected or obvious contamination?	☒Y	☐N	☐	☐

Agency, office and person contacted: Marvin Juhnke 608 [illegible] 233-3212

7. Contamination suspected because of: ☒Odor ☒Soil Staining ☐Free Product ☐Sheen on Groundwater ☒Field Instrument Test

METHOD OF ACHIEVING 10% LEVEL DESCRIPTION

☐Eductor Or Diffused Air Blower

Eductor driven by compressed air, bonded and drop tube left in place; vapors discharged minimum of 12 feet above ground. Diffused air blower bonded and drop tube removed. Air pressure not exceeding 5 psig.

☐Dry Ice

Dry Ice introduced at 1.5 pounds per 100 gallons of tank capacity. Dry ice crushed and distributed over the greatest possible tank area. Dry ice evaporated before proceeding.

☐Inert Gas (CO/2 or N/2) NOTE: INERT GASSES PRODUCE AN OXYGEN DEFICIENT ATMOSPHERE. THE TANK MAY NOT BE ENTERED IN THIS STATE WITHOUT SPECIAL EQUIPMENT.

Gas introduced through a single opening at a point near the bottom of the tank at the end of the tank opposite the vent. Gas introduced under low pressure not to exceed 5 psig to reduce static electricity. Gas introducing device grounded.

☐Tank atmosphere monitored for flammable or combustible vapor levels.

Calibrate combustible gas indicator. Drop tube removed prior to checking atmosphere. Tank space monitored at bottom, middle and upper portion of tank. Readings of 10% or less of the lower flammable range (LEL) obtained before removing tank from ground.

NOTE SPECIFIC PROBLEMS OR NONCOMPLIANCE ISSUES BELOW

REMOVER/CLEANER INFORMATION

Remover Name (print)	Remover Signature	Remover Certification No.	Date Signed
Donald Kipe	Donald Kipe	42704	8-12-18

INSPECTOR INFORMATION

Inspector Name (print)	Inspector Signature	Inspector Certification No.
Bob Knudson	Bob Knudson	35113
FDID # For Location Where Inspection Performed	Inspector Telephone Number	Date Signed
Fort Atkinson 2801	1-800-422-5220	7/16-18

TANK INVENTORY FORM ERS-7437 SIGNED BY THE OWNER MUST BE SUBMITTED WITH EACH CLOSURE CHECKLIST

OWNER

Wisconsin Department of Industry, Labor and Human Relations

UNDERGROUND PETROLEUM PRODUCT TANK INVENTORY

Information Required By Sec. 101.142, Wis. Stats.

Send Completed Form To:
Safety & Buildings Division
P.O. Box 7969
Madison, WI 53707
Telephone (608) 267-5280

For Office Use Only:
Tank ID #

Underground tanks in Wisconsin that have stored or currently store petroleum or regulated substances must be registered. Please see the reverse side for additional information on this program. An underground storage tank is defined as any tank with at least 10 percent of its total volume (included piping) located below ground level. A separate form is needed for each tank. Send each completed form to the agency designated in the top right corner. Have you previously registered this tank by submitting a form? ☐ YES ☐ NO If yes, are you correcting/updating information only? ☐ Yes ☐ No

This registration applies to a tank that is (check one):
1A ☐ In Use or 1B. ☐ Newly Installed
2 ☐ Abandoned With Product
3 ☐ Abandoned No Product (empty) or With Water
4. ☒ Closed - Tank Removed
6. ☐ Closed - Filled With Inert Material
7. ☐ Out of Service - Provide Date: _____
8. ☐ Changed Ownership (Indicate new owner below)

Fire Department Providing Fire Coverage Where Tank Located:

A. IDENTIFICATION: (Please Print)

1. Tank Site Name: J-Star Industries, Inc.
Site Address: 801 Janesville Ave.
Site Telephone No.: (920) 563-2494
☐ City ☐ Village ☐ Town of: Fort Atkinson
State: WI
Zip Code: 53538
County: Jefferson

2. Owner Name (mail sent here unless indicated otherwise in #3 below): J-Star Industries
Owner Mailing Address (mail sent here unless indicated otherwise in #3): 801 Janesville Ave.
☐ City ☐ Village ☐ Town of: Fort Atkinson
State: WI
Zip Code: 53538
County: Jefferson

3. Alternate Mailing Name If Different Than #2:
Alternate Mailing Street Address If Different From #2:
☐ City ☐ Village ☐ Town of.
State:
Zip Code:
County:

4. Tank Age (date installed, if known or years old):
5. Tank Capacity (gallons): 500
6. Tank Manufacturer's Name (if known):

B. TYPE OF USER (check one):
1 ☐ Gas Station
2 ☐ Bulk Storage
3. ☐ Utility
4. ☐ Mercantile
5 ☒ Industrial
6 ☐ Government
7. ☐ School
8. ☐ Residential
9 ☐ Agricultural
10 ☐ Other (specify): _____

C. TANK CONSTRUCTION:
1 ☒ Bare Steel
2 ☐ Cathodically Protected and Coated Steel (A ☐ Sacrificial Anodes or B. ☐ Impressed Current)
3 ☐ Coated Steel
4 ☐ Fiberglass
5. ☐ Other (specify): _____
6 ☐ Relined - Date _____
7 ☐ Steel - Fiberglass Reinforced Plastic Composite
9. ☐ Unknown

Approval: 1. ☐ Nat'l Std 2. ☐ UL 3. ☐ Other:
Is Tank Double Walled? ☐ Yes ☐ No
Overfill Protection Provided? ☐ Yes ☒ No If yes, identify type:
Spill Containment? ☐ Yes ☐ No

Tank leak detection method: 1. ☐ Automatic tank gauging 2. ☐ Vapor monitoring 3. ☐ Groundwater monitoring 4. ☐ Inventory control and tightness testing 5 ☐ Interstitial monitoring 6 ☒ Not required at present 7. ☐ Manual Tank Gauging (only for tanks of 1,000 gallons or less)

D. PIPING CONSTRUCTION
1 ☒ Bare Steel
2 ☐ Cathodically Protected and Coated or Wrapped Steel (A. ☐ Sacrificial Anodes or B. ☐ Impressed Current)
3. ☐ Coated Steel
4 ☐ Fiberglass
5 ☐ Other (specify): _____
9. ☐ Unknown

Piping System Type: 1. ☐ Pressurized piping with: A. ☐ auto shutoff; B. ☐ alarm; or C. ☐ flow restrictor 2. ☐ Suction piping with check valve at tank
3 ☐ Suction piping with check valve at pump and inspectable

Piping leak detection method: used if pressurized or check valve at tank: 1. ☐ Vapor monitoring 2. ☐ Interstitial monitoring
3. ☐ Groundwater monitoring 4. ☐ Tightness testing 5. ☐ Line Leak Detector 6. ☒ Not Required

Approval: 1. ☐ Nat'l Std 2 ☐ UL 3 ☐ Other:
Double Walled: ☐ Yes ☐ No

E. TANK CONTENTS
1 ☐ Diesel
2 ☒ Leaded
3 ☐ Unleaded
4 ☐ Fuel Oil
5 ☐ Gasohol
6 ☐ Other
7 ☐ Empty
8. ☐ Sand/Gravel/Slurry
9 ☐ Unknown
10 ☐ Premix
11 ☐ Waste Oil
12. ☐ Propane
13 ☐ Chemical * _____ _____ _____
14 ☐ Kerosene
15 ☐ Aviation

* If # 13 is checked, indicate the chemical name(s) or number(s) of the chemical or waste

If Tank Closed, Give Date (mo/day/yr): 8/12/98
Has a site assessment been completed? (see reverse side for details) ☒ Yes ☐ No

If installation of a new tank is being reported, indicate who performed the installation inspection:
1 ☐ Fire Department 2 ☐ DILHR 3 ☐ Other (identify) _____

Name of Owner or Operator (please print): J STAR INDUSTRIES INC
Indicate Whether: ☒ Owner or ☐ Operator

Signature of Owner or Operator: J Michael Phelps VP Controller
Date Signed: 9/9/98

Wisconsin Department of Industry, Labor and Human Relations

UNDERGROUND PETROLEUM PRODUCT TANK INVENTORY

Information Required By Sec. 101.142, Wis. Stats.

Send Completed Form To:
Safety & Buildings Division
P.O. Box 7969
Madison, WI 53707
Telephone (608) 267-5280

For Office Use Only:
Tank ID #

Underground tanks in Wisconsin that have stored or currently store petroleum or regulated substances must be registered. Please see the reverse side for additional information on this program. An underground storage tank is defined as any tank with at least 10 percent of its total volume (included piping) located below ground level. A separate form is needed for each tank. Send each completed form to the agency designated in the top right corner. Have you previously registered this tank by submitting a form? ☐ YES ☐ NO If yes, are you correcting/updating information only? ☐ Yes ☐ No

This registration applies to a tank that is (check one):
1A ☐ In Use or 1B ☐ Newly Installed
2 ☐ Abandoned With Product
3 ☐ Abandoned No Product (empty) or With Water
4 ☒ Closed - Tank Removed
6 ☐ Closed - Filled With Inert Material
7 ☐ Out of Service - Provide Date: _____
8. ☐ Changed Ownership (Indicate new owner below)

Fire Department Providing Fire Coverage Where Tank Located:

A. IDENTIFICATION: (Please Print)

1. Tank Site Name: J-Star Industries
Site Address: 801 Janesville Ave.
Site Telephone No.: (920) 563-2494
☐ City: Fort Atkinson ☐ Village ☐ Town of:
State: WI Zip Code: 53538 County: Jefferson

2. Owner Name (mail sent here unless indicated otherwise in #3 below): J-Star Industries
Owner Mailing Address (mail sent here unless indicated otherwise in #3): 801 Janesville Ave.
☐ City: Fort Atkinson, ☐ Village ☐ Town of:
State: WI Zip Code: 53538 County: Jefferson

3. Alternate Mailing Name If Different Than #2:
Alternate Mailing Street Address If Different From #2:
☐ City ☐ Village ☐ Town of:
State: Zip Code: County:

4. Tank Age (date installed, if known or years old):
5. Tank Capacity (gallons): 500
6. Tank Manufacturer's Name (if known):

B. TYPE OF USER (check one):
1 ☐ Gas Station
2 ☐ Bulk Storage
3 ☐ Utility
4 ☐ Mercantile
5 ☒ Industrial
6 ☐ Government
7 ☐ School
8. ☐ Residential
9 ☐ Agricultural
10 ☐ Other (specify): _____

C. TANK CONSTRUCTION:
1 ☒ Bare Steel
2 ☐ Cathodically Protected and Coated Steel (A ☐ Sacrificial Anodes or B. ☐ Impressed Current)
3 ☐ Coated Steel
4 ☐ Fiberglass
5. ☐ Other (specify): _____
6 ☐ Relined - Date _____
7 ☐ Steel - Fiberglass Reinforced Plastic Composite
9. ☐ Unknown

Approval: 1. ☐ Nat'l Std 2 ☐ UL 3. ☐ Other:
Is Tank Double Walled? ☐ Yes ☐ No
Overfill Protection Provided? ☐ Yes ☒ No If yes, identify type:
Spill Containment? ☐ Yes ☐ No

Tank leak detection method: 1. ☐ Automatic tank gauging 2. ☐ Vapor monitoring 3. ☐ Groundwater monitoring 4. ☐ Inventory control and tightness testing 5 ☐ Interstitial monitoring 6 ☒ Not required at present 7. ☐ Manual Tank Gauging (only for tanks of 1,000 gallons or less)

D. PIPING CONSTRUCTION
1 ☒ Bare Steel
2 ☐ Cathodically Protected and Coated or Wrapped Steel (A. ☐ Sacrificial Anodes or B. ☐ Impressed Current)
3. ☐ Coated Steel
4 ☐ Fiberglass
5 ☐ Other (specify): _____
9. ☐ Unknown

Piping System Type: 1 ☐ Pressurized piping with: A. ☐ auto shutoff; B. ☐ alarm; or C. ☐ flow restrictor 2. ☒ Suction piping with check valve at tank 3. ☐ Suction piping with check valve at pump and inspectable

Piping leak detection method: used if pressurized or check valve at tank: 1. ☐ Vapor monitoring 2. ☐ Interstitial monitoring 3 ☐ Groundwater monitoring 4. ☐ Tightness testing 5. ☐ Line Leak Detector 6. ☒ Not Required

Approval: 1. ☐ Nat'l Std 2 ☐ UL 3 ☐ Other:
Double Walled: ☐ Yes ☐ No

E. TANK CONTENTS
1 ☒ Diesel
2 ☐ Leaded
3 ☐ Unleaded
4 ☐ Fuel Oil
5 ☐ Gasohol
6 ☐ Other
7 ☐ Empty
8 ☐ Sand/Gravel/Slurry
9 ☐ Unknown
10 ☐ Premix
11 ☐ Waste Oil
12 ☐ Propane
13 ☐ Chemical * _____ _____ _____
14 ☐ Kerosene
15 ☐ Aviation

* If # 13 is checked, indicate the chemical name(s) or number(s) of the chemical or waste.

If Tank Closed, Give Date (mo/day/yr): 8/12/98
Has a site assessment been completed? (see reverse side for details) ☒ Yes ☐ No

If installation of a new tank is being reported, indicate who performed the installation inspection:
1 ☐ Fire Department 2 ☐ DILHR 3 ☐ Other (identify) _____

Name of Owner or Operator (please print): J STAR INDUSTRIES INC
Indicate Whether: ☒ Owner or ☐ Operator

Signature of Owner or Operator: J. Michael Phelps VP Controller
Date Signed: 9/9/98

SBD 437 (R. 04/92) IMPORTANT: Complete as many items on this form as possible. Failure to provide sufficient

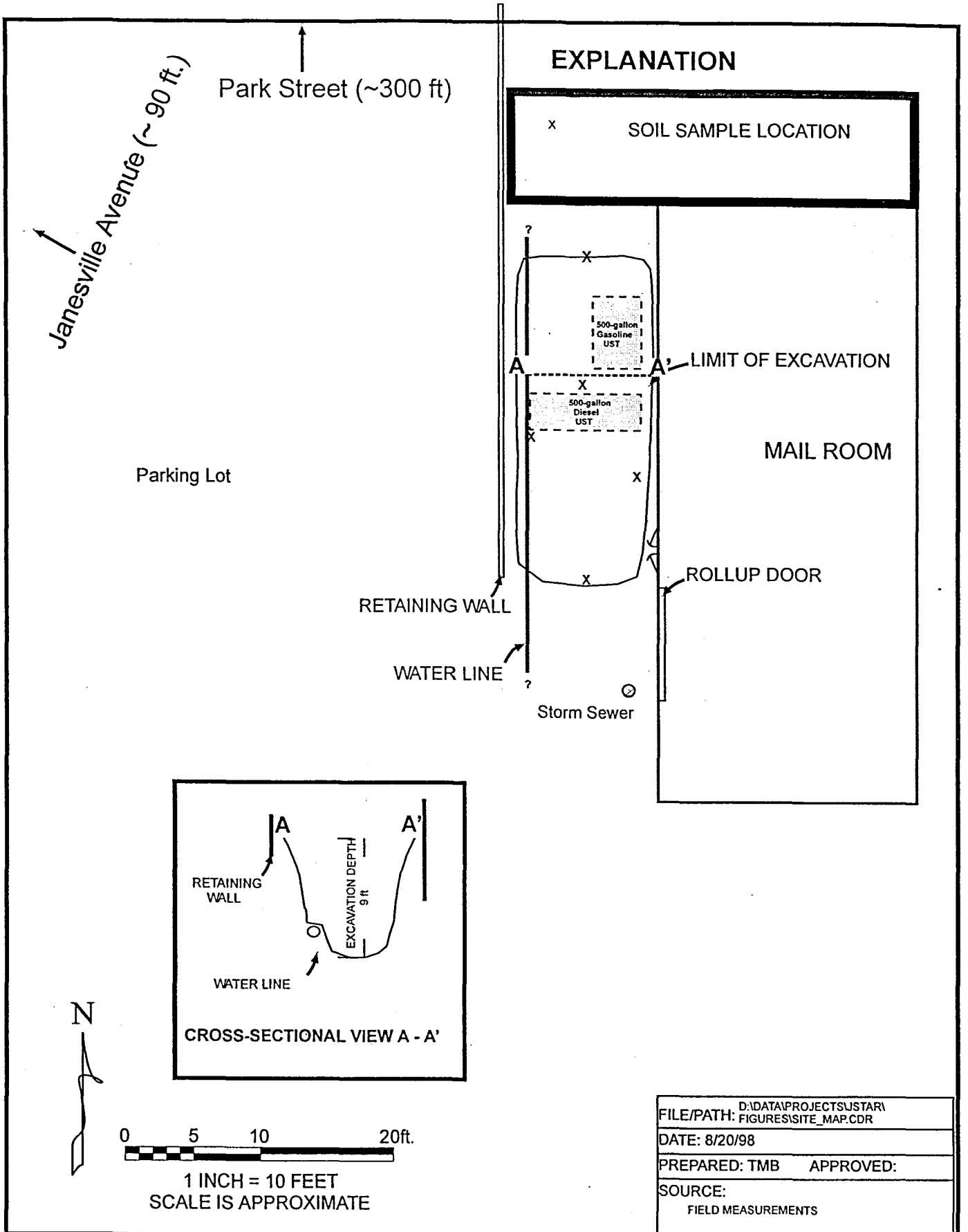

FILE/PATH:	D:\DATA\PROJECTS\JSTAR\FIGURES\SITE_MAP.CDR
DATE: 8/20/98	
PREPARED: TMB	APPROVED:
SOURCE: FIELD MEASUREMENTS	

SEYMOUR ENVIRONMENTAL SERVICES, INC.
P.O. BOX 398 2531 DYRESON ROAD McFARLAND, WISCONSIN 53558
TELEPHONE: 608 838-9120 FAX: 608 838-9121

SITE MAP
J-STAR INDUSTRIES, INC.
801 JANESVILLE AVENUE
FORT ATKINSON, WISCONSIN

FIGURE 2

TABLE 1
POST-EXCAVATION SIDEWALL SOIL DATA
J-STAR INDUSTRIES, INC.
801 JANESVILLE AVENUE
FORT ATKINSON, WI 53538

Sample Location	Depth (feet)	Date Collected	OVM	DRO	GRO	Methyl Tert-Butyl Ether	Benzene	Toluene	Ethylbenzene	1,3,5-Trimethylbenzene	1,2,4-Trimethylbenzene	Total Xylenes	Lead
EAST, 6'	6	8/13/98		22	**510**	1.4	**3**	**35**	**11**	6.2	1.9	**54**	11
WEST, 6.5	6.5	8/13/98		9	**190**	<0.1	<0.1	<0.1	1.2	9.1	26	**20.4**	7.7
NORTH, 7'	7	8/13/98		<4.2	7.6	0.1	0.025	0.044	0.24	0.025	0.11	0.73	10
SOUTH, 7'	7	8/13/98		<4.7	71	0.22	<0.078	0.23	4	0.93	3.2	**19.9**	7.9
BOTTOM, 8.5	8.5	8/13/98		<4.5	**240**	0.38	**1.9**	**32**	**7.4**	2.6	8.3	**39**	10
WDNR Residual Contaminant Levels[1]			NS	100*	100*	NS	0.0055	1.5	2.9	NS	NS	4.1	50**

Bold values are concentrations greater than Residual Contaminant Levels.
All values reported in milligrams per kilogram (parts per million).

Notes:
OVM = Organic vapor meter.
DRO = Diesel Range Organic Compounds.
GRO = Gasoline Range Organic Compounds.
WDNR = Wisconsin Department of Natural Resources.
1 = Wis. Adm. Code NR 720.09 (4) (a) subd. 1 and 2 and Tables 1 and 2.
* = For soils with hydraulic conductivity greater than $1x10^{-6}$ cm/sec.
** = Non-industrial standard.
NS = No standard.

FAX

Date 08/25/98 9:54 AM

Number of pages including cover sheet 15

TO: Mark Butorac
J-Star Industries

Phone 920-563-5521
Fax Phone 920-563-2089

CC: Donald F. Kiesling, Jr.

FROM: Robyn Seymour
Seymour Environmental Services, Inc.
P.O. Box 398
McFarland, WI 53558-0398

Phone 608-838-9120
Fax Phone 608-838-9121

REMARKS: ☐ Urgent ☒ For your review ☐ Reply ASAP ☒ Please Comment

Mr. Butorac:

I am enclosing the tabulated soil sample results. Please note that the units for the PVOC compounds has been converted from ug/kg (approximately part per billion) in the lab report to mg/kg (parts per million) on the table to be consistent with the GRO and DRO.

An estimated 75 yards have been removed. I would recommend conducting an investigation with a geoprobe to determine the extent of the soil contamination and to determine if groundwater has been impacted. If it is determined that the contamination does not extend much farther than the extent of the excavation and that groundwater has not been impacted you could request site closure with no further action.

Sincerely,

Robyn Seymour

Robyn Seymour

TABLE 1
POST-EXCAVATION SIDEWALL SOIL DATA
J-STAR INDUSTRIES, INC.
801 JANESVILLE AVENUE
FORT ATKINSON, WI 53538

Sample Location	Depth (feet)	Date Collected	OVM	DRO	GRO	Methyl Tert-Butyl Ether	Benzene	Toluene	Ethylbenzene	1,3,5-Trimethylbenzene	1,2,4-Trimethylbenzene	Total Xylenes	Lead
EAST, 6'	6	8/13/98		22	**510**	1.4	**3**	**35**	**11**	6.2	1.9	**54**	11
WEST, 6.5	6.5	8/13/98		9	**190**	<0.1	<0.1	<0.1	1.2	9.1	26	**20.4**	7.7
NORTH, 7'	7	8/13/98		<4.2	7.6	0.1	0.025	0.044	0.24	0.025	0.11	0.73	10
SOUTH, 7'	7	8/13/98		<4.7	71	0.22	<0.078	0.23	4	0.93	3.2	**18.9**	7.9
BOTTOM, 8.5	8.5	8/13/98		<4.5	**240**	0.38	**1.9**	**32**	**7.4**	2.6	8.3	**39**	10
WDNR Residual Contaminant Levels[1]			NS	100*	100*	NS	0.0055	15	2.9	NS	NS	4.1	50**

Bold values are concentrations greater than Residual Contaminant Levels.
All values reported in milligrams per kilogram (parts per million).

Notes:
OVM = Organic vapor meter.
DRO = Diesel Range Organic Compounds.
GRO = Gasoline Range Organic Compounds.
WDNR = Wisconsin Department of Natural Resources.
1 = Wis. Adm. Code NR 720.09 (4) (a) subd. 1 and 2 and Tables 1 and 2.
* = For soils with hydraulic conductivity greater than $1x10^{-4}$ cm/sec.
** = Non-industrial standard.
NS = No standard.

EN CHEM INC.
1795 Industrial Drive
Green Bay, WI 54302
920-469 2436
800-7-ENCHEM
FAX: 920-469-8827

Lab#:	TestGroupID:	Comment:
884878-001 EAST, 6'	GRO-S-ME	Sample exhibits hydrocarbon pattern resembling gasoline. Early and late peaks were present outside of window.
	DRO-S	Early peaks present outside of window of analysis.
884878-002 WEST, 6.5'	GRO-S-ME	Sample exhibits hydrocarbon pattern resembling diesel fuel or extremely weathered gasoline.
	DRO-S	Early peaks present outside of window of analysis.
884878-003 NORTH, 7'	GRO-S-ME	Sample exhibits hydrocarbon pattern resembling gasoline Early peaks were present outside of window.
884878-005 BOTTOM, 8.5'	GRO-S-ME	Sample exhibits hydrocarbon pattern resembling gasoline. Early and late peaks were present outside of window.

EN CHEM INC.
1795 Industrial Drive
Green Bay, WI 54302
920 469 2436
800-7 ENCHEM
Fax: 920-469-8827

- Analytical Report -

Project Name : J-STAR INDUSTRIES
Project Number :
Field ID : EAST, 6'
Lab Sample Number : 884878-001
WI DNR LAB ID : 405132750

Client : SEYMOUR ENVIRONMENTAL SERVICES
Report Date : 8/19/98
Collection Date : 8/13/98
Matrix Type : SOIL

Inorganic Results

Test	Result	LOD	LOQ	EQL	Units	Code	Analysis Date	Prep Method	Analysis Method	Analyst
Lead	11	4.1	13		mg/kg	Q	8/19/98	SW846 3051	SW846 7421	MSB
Solids, percent	82.5				%		8/17/98	SM2540G	SM2540G	DJB

Organic Results

Preservation Date : 8/17/98

DIESEL RANGE ORGANICS - SOIL Prep Method: Wi MOD DRO Prep Date: 8/17/98 Analyst: DJB

Analyte	Result	LOD	LOQ	EQL	Units	Code	Analysis Date	Analysis Method
DIESEL RANGE ORGANICS	22			4.6	mg/kg		8/18/98	Wi MOD DRO
Blank spike	71			50	%Recov		8/18/98	Wi MOD DRO
Blank spike duplicate	73			50	%Recov		8/18/98	Wi MOD DRO
Blank	< 5.0			5.0	mg/kg		8/18/98	Wi MOD DRO

Organic Results

GASOLINE RANGE ORGANICS - SOIL/METHANOL Prep Method: Wi MOD.GRO Prep Date: 8/17/98 Analyst: PMS

Analyte	Result	LOD	LOQ	EQL	Units	Code	Analysis Date	Analysis Method
Gasoline Range Organics	510			12	mg/kg		8/18/98	Wi MOD GRO
Blank Spike	106			1.00	%Recov		8/18/98	Wi MOD GRO
Blank Spike Duplicate	109			1.00	%Recov		8/18/98	Wi MOD GRO
Blank	< 2.5			2.5	mg/kg		8/18/98	Wi MOD GRO

Organic Results

PVOC - METHANOL PRESERVED SOIL Prep Method: SW846 5030 Prep Date: 8/17/98 Analyst: PMS

Analyte	Result	LOD	LOQ	EQL	Units	Code	Analysis Date	Analysis Method
a,a,a-Trifluorotoluene	112				%Recov		8/18/98	MOD 8021B

All soil results are reported on a dry weight basis unless otherwise noted.

EN CHEM INC
1795 Industrial Drive
Green Bay, WI 54302
920-469 2436
800-7-ENCHEM
FAX: 920-469 6827

- Analytical Report -

Project Name : J-STAR INDUSTRIES

Project Number :

Client : SEYMOUR ENVIRONMENTAL SERVICES

Field ID : EAST, 6'

Report Date : 8/19/98

Lab Sample Number : 884878-001

Collection Date : 8/13/98

WI DNR LAB ID : 405132750

Matrix Type : SOIL

Benzene	3000	120	290	ug/kg	8/18/98	MOD 8021B
Ethylbenzene	11000	120	290	ug/kg	8/18/98	MOD 8021B
Methyl-tert-butyl-ether	1400	120	290	ug/kg	8/18/98	MOD 8021B
Toluene	35000	120	290	ug/kg	8/18/98	MOD 8021B
1,3,5-Trimethylbenzene	6200	120	290	ug/kg	8/18/98	MOD 8021B
1,2,4-Trimethylbenzene	19000	120	290	ug/kg	8/18/98	MOD 8021B
Xylenes, -m, -p	39000	120	290	ug/kg	8/18/98	MOD 8021B
Xylene, -o	15000	120	290	ug/kg	8/18/98	MOD 8021B

All soil results are reported on a dry weight basis unless otherwise noted.

EN CHEM INC.
1795 Industrial Drive
Green Bay, WI 54302
920 469-2436
800 7 ENCHEM
Fax: 920-469 8827

- Analytical Report -

Project Name : J-STAR INDUSTRIES
Project Number :
Field ID : WEST, 6.5'
Lab Sample Number : 884878-002
WI DNR LAB ID : 405132750

Client : SEYMOUR ENVIRONMENTAL SERVICES
Report Date : 8/19/98
Collection Date : 8/13/98
Matrix Type : SOIL

Inorganic Results

Test	Result	LOD	LOQ	EQL	Units	Code	Analysis Date	Prep Method	Analysis Method	Analyst
Lead	7.7	3.8	12		mg/kg	Q	8/19/98	SW846 3051	SW846 7421	MSB
Solids, percent	90.1				%		8/17/98	SM2540G	SM2540G	DJB

Organic Results

Preservation Date : 8/17/98

DIESEL RANGE ORGANICS - SOIL Prep Method: Wi MOD DRO Prep Date: 8/17/98 Analyst: DJB

Analyte	Result	LOD	LOQ	EQL	Units	Code	Analysis Date	Analysis Method
DIESEL RANGE ORGANICS	9.0			4.1	mg/kg		8/18/98	Wi MOD DRO
Blank spike	71			50	%Recov		8/18/98	Wi MOD DRO
Blank spike duplicate	73			50	%Recov		8/18/98	Wi MOD DRO
Blank	< 5.0			5.0	mg/kg		8/18/98	Wi MOD DRO

Organic Results

GASOLINE RANGE ORGANICS - SOIL/METHANOL Prep Method: Wi MOD.GRO Prep Date: 8/17/98 Analyst: PMS

Analyte	Result	LOD	LOQ	EQL	Units	Code	Analysis Date	Analysis Method
Gasoline Range Organics	190			11	mg/kg		8/18/98	Wi MOD GRO
Blank Spike	106			1.00	%Recov		8/18/98	Wi MOD GRO
Blank Spike Duplicate	109			1.00	%Recov		8/18/98	Wi MOD GRO
Blank	< 2.5			2.5	mg/kg		8/18/98	Wi MOD GRO

Organic Results

PVOC - METHANOL PRESERVED SOIL Prep Method: SW846 5030 Prep Date: 8/17/98 Analyst: PMS

Analyte	Result	LOD	LOQ	EQL	Units	Code	Analysis Date	Analysis Method
a,a,a-Trifluorotoluene	107				%Recov		8/18/98	MOD 8021B

All soil results are reported on a dry weight basis unless otherwise noted.

EN CHEM INC.
1795 Industrial Drive
Green Bay, WI 54302
920-469-2436
800-7-ENCHEM
Fax: 920-469 8827

- Analytical Report -

Project Name : J-STAR INDUSTRIES

Project Number :

Field ID : WEST, 6.5'

Lab Sample Number : 884878-002

WI DNR LAB ID : 405132750

Client : SEYMOUR ENVIRONMENTAL SERVICES

Report Date : 8/19/98

Collection Date : 8/13/98

Matrix Type : SOIL

Benzene	<	100	100	240	ug/kg	8/18/98	MOD 8021B
Ethylbenzene		1200	110	260	ug/kg	8/18/98	MOD 8021B
Methyl-tert-butyl-ether	<	100	100	240	ug/kg	8/18/98	MOD 8021B
Toluene	<	100	100	240	ug/kg	8/18/98	MOD 8021B
1,3,5-Trimethylbenzene		9100	110	260	ug/kg	8/18/98	MOD 8021B
1,2,4-Trimethylbenzene		26000	110	260	ug/kg	8/18/98	MOD 8021B
Xylenes, -m, -p		20000	110	260	ug/kg	8/18/98	MOD 8021B
Xylene, -o		400	110	260	ug/kg	8/18/98	MOD 8021B

All soil results are reported on a dry weight basis unless otherwise noted.

EN CHEM INC.
1795 Industrial Drive
Green Bay, WI 54302
920 469-2436
800 7 ENCHEM
FAX: 920-469-8827

- Analytical Report -

Project Name : J-STAR INDUSTRIES
Project Number :
Field ID : NORTH, 7'
Lab Sample Number : 884878-003
WI DNR LAB ID : 405132750

Client : SEYMOUR ENVIRONMENTAL SERVICES
Report Date : 8/20/98
Collection Date : 8/13/98
Matrix Type : SOIL

Inorganic Results

Test	Result	LOD	LOQ	EQL	Units	Code	Analysis Date	Prep Method	Analysis Method	Analyst
Lead	10	4.0	13		mg/kg	Q	8/19/98	SW846 3051	SW846 7421	MSB
Solids, percent	82.6				%		8/17/98	SM2540G	SM2540G	DJB

Organic Results

Preservation Date : 8/17/98

DIESEL RANGE ORGANICS - SOIL Prep Method: Wi MOD DRO Prep Date: 8/17/98 Analyst: DJB

Analyte	Result	LOD	LOQ	EQL	Units	Code	Analysis Date	Analysis Method
DIESEL RANGE ORGANICS	< 4.2			4.2	mg/kg		8/17/98	Wi MOD DRO
Blank spike	71			50	%Recov		8/17/98	Wi MOD DRO
Blank spike duplicate	73			50	%Recov		8/17/98	Wi MOD DRO
Blank	< 5.0			5.0	mg/kg		8/17/98	Wi MOD DRO

Organic Results

GASOLINE RANGE ORGANICS - SOIL/METHANOL Prep Method: Wi MOD.GRO Prep Date: 8/17/98 Analyst: PMS

Analyte	Result	LOD	LOQ	EQL	Units	Code	Analysis Date	Analysis Method
Gasoline Range Organics	7.6			3.0	mg/kg		8/20/98	Wi MOD GRO
Blank Spike	106			1.00	%Recov		8/20/98	Wi MOD GRO
Blank Spike Duplicate	109			1.00	%Recov		8/20/98	Wi MOD GRO
Blank	< 2.5			2.5	mg/kg		8/20/98	Wi MOD GRO

Organic Results

PVOC - METHANOL PRESERVED SOIL Prep Method: SW846 5030 Prep Date: 8/17/98 Analyst: PMS

Analyte	Result	LOD	LOQ	EQL	Units	Code	Analysis Date	Analysis Method
a,a,a-Trifluorotoluene	98				%Recov		8/20/98	MOD 8021B

All soil results are reported on a dry weight basis unless otherwise noted.

EN CHEM INC.
1795 Industrial Drive
Green Bay, WI 54302
920 469 2436
800 7 ENCHEM
Fax: 920 469-8827

- Analytical Report -

Project Name : J-STAR INDUSTRIES

Project Number :

Client : SEYMOUR ENVIRONMENTAL SERVICES

Field ID : NORTH, 7'

Report Date : 8/20/98

Lab Sample Number : 884878-003

Collection Date : 8/13/98

WI DNR LAB ID : 405132750

Matrix Type : SOIL

Benzene	< 25	25	60	ug/kg		8/20/98	MOD 8021B
Ethylbenzene	240	30	72	ug/kg		8/20/98	MOD 8021B
Methyl-tert-butyl-ether	100	30	72	ug/kg		8/20/98	MOD 8021B
Toluene	44	30	72	ug/kg	Q	8/20/98	MOD 8021B
1,3,5-Trimethylbenzene	< 25	25	60	ug/kg		8/20/98	MOD 8021B
1,2,4-Trimethylbenzene	110	30	72	ug/kg		8/20/98	MOD 8021B
Xylenes, -m, -p	530	30	72	ug/kg		8/20/98	MOD 8021B
Xylene, -o	200	30	72	ug/kg		8/20/98	MOD 8021B

All soil results are reported on a dry weight basis unless otherwise noted.

EN CHEM INC.
1795 Industrial Drive
Green Bay, WI 54302
920-469-2436
800-7-ENCHEM
Fax: 920-469-8827

- Analytical Report -

Project Name : J-STAR INDUSTRIES
Project Number :
Field ID : SOUTH, 7'
Lab Sample Number : 884878-004
WI DNR LAB ID : 405132750

Client : SEYMOUR ENVIRONMENTAL SERVICES
Report Date : 8/20/98
Collection Date : 8/13/98
Matrix Type : SOIL

Inorganic Results

Test	Result	LOD	LOQ	EQL	Units	Code	Analysis Date	Prep Method	Analysis Method	Analyst
Lead	7.9	3.9	12		mg/kg	Q	8/19/98	SW846 3051	SW846 7421	MSB
Solids, percent	85.3				%		8/17/98	SM2540G	SM2540G	DJB

Organic Results

Preservation Date : 8/17/98

DIESEL RANGE ORGANICS - SOIL Prep Method: Wi MOD DRO Prep Date: 8/17/98 Analyst: DJB

Analyte	Result	LOD	LOQ	EQL	Units	Code	Analysis Date	Analysis Method
DIESEL RANGE ORGANICS	< 4.7			4.7	mg/kg		8/18/98	Wi MOD DRO
Blank spike	71			50	%Recov		8/18/98	Wi MOD DRO
Blank spike duplicate	73			50	%Recov		8/18/98	Wi MOD DRO
Blank	< 5.0			5.0	mg/kg		8/18/98	Wi MOD DRO

Organic Results

GASOLINE RANGE ORGANICS - SOIL/METHANOL Prep Method: Wi MOD.GRO Prep Date: 8/17/98 Analyst: PMS

Analyte	Result	LOD	LOQ	EQL	Units	Code	Analysis Date	Analysis Method
Gasoline Range Organics	71			2.9	mg/kg		8/20/98	Wi MOD GRO
Blank Spike	108			1.00	%Recov		8/20/98	Wi MOD GRO
Blank Spike Duplicate	109			1.00	%Recov		8/20/98	Wi MOD GRO
Blank	< 2.5			2.5	mg/kg		8/20/98	Wi MOD GRO

Organic Results

PVOC - METHANOL PRESERVED SOIL Prep Method: SW846 5030 Prep Date: 8/17/98 Analyst: PMS

Analyte	Result	LOD	LOQ	EQL	Units	Code	Analysis Date	Analysis Method
a,a,a-Trifluorotoluene	103				%Recov		8/20/98	MOD 8021B

All soil results are reported on a dry weight basis unless otherwise noted.

EN CHEM INC.
1795 Industrial Drive
Green Bay, WI 54302
920 469 2436
800 7 ENCHEM
Fax: 920 469 8827

- Analytical Report -

Project Name : J-STAR INDUSTRIES
Project Number :
Field ID : SOUTH, 7'
Lab Sample Number : 884878-004
WI DNR LAB ID : 405132750

Client : SEYMOUR ENVIRONMENTAL SERVICES
Report Date : 8/20/98
Collection Date : 8/13/98
Matrix Type : SOIL

Benzene	78	29	70	ug/kg	8/20/98	MOD 8021B
Ethylbenzene	4000	29	70	ug/kg	8/20/98	MOD 8021B
Methyl-tert-butyl-ether	220	29	70	ug/kg	8/20/98	MOD 8021B
Toluene	230	29	70	ug/kg	8/20/98	MOD 8021B
1,3,5-Trimethylbenzene	930	29	70	ug/kg	8/20/98	MOD 8021B
1,2,4-Trimethylbenzene	3200	29	70	ug/kg	8/20/98	MOD 8021B
Xylenes, -m, -p	15000	29	70	ug/kg	8/20/98	MOD 8021B
Xylene, -o	4900	29	70	ug/kg	8/20/98	MOD 8021B

All soil results are reported on a dry weight basis unless otherwise noted.

EN CHEM INC.
1795 Industrial Drive
Green Bay, WI 54302
920-469 2436
800-7-ENCHEM
Fax: 920 469 8827

- Analytical Report -

Project Name : J-STAR INDUSTRIES
Project Number :
Field ID : BOTTOM, 8.5'
Lab Sample Number : 884878-005
WI DNR LAB ID : 405132750

Client : SEYMOUR ENVIRONMENTAL SERVICES
Report Date : 8/20/98
Collection Date : 8/13/98
Matrix Type : SOIL

Inorganic Results

Test	Result	LOD	LOQ	EQL	Units	Code	Analysis Date	Prep Method	Analysis Method	Analyst
Lead	10	4.1	13		mg/kg	Q	8/19/98	SW846 3051	SW846 7421	MSB
Solids, percent	83.1				%		8/17/98	SM2540G	SM2540G	DJB

Organic Results

Preservation Date : 8/17/98

DIESEL RANGE ORGANICS - SOIL Prep Method: Wi MOD DRO Prep Date: 8/17/98 Analyst: DJB

Analyte	Result	LOD	LOQ	EQL	Units	Code	Analysis Date	Analysis Method
DIESEL RANGE ORGANICS	< 4.5			4.5	mg/kg		8/18/98	Wi MOD DRO
Blank spike	71			50	%Recov		8/18/98	Wi MOD DRO
Blank spike duplicate	73			50	%Recov		8/18/98	Wi MOD DRO
Blank	< 5.0			5.0	mg/kg		8/18/98	Wi MOD DRO

Organic Results

GASOLINE RANGE ORGANICS - SOIL/METHANOL Prep Method: Wi MOD.GRO Prep Date: 8/17/98 Analyst: PMS

Analyte	Result	LOD	LOQ	EQL	Units	Code	Analysis Date	Analysis Method
Gasoline Range Organics	240			12	mg/kg		8/19/98	Wi MOD GRO
Blank Spike	106			1.00	%Recov		8/19/98	Wi MOD GRO
Blank Spike Duplicate	109			1.00	%Recov		8/19/98	Wi MOD GRO
Blank	< 2.5			2.5	mg/kg		8/19/98	Wi MOD GRO

Organic Results

PVOC - METHANOL PRESERVED SOIL Prep Method: SW846 5030 Prep Date: 8/17/98 Analyst: PMS

Analyte	Result	LOD	LOQ	EQL	Units	Code	Analysis Date	Analysis Method
a,a,a-Trifluorotoluene	90				%Recov		8/19/98	MOD 8021B

All soil results are reported on a dry weight basis unless otherwise noted.

EN CHEM INC.

1795 Industrial Drive
Green Bay, WI 54302
920 469 2436
800 7 ENCHEM
Fax: 920-469-8827

- Analytical Report -

Project Name : J-STAR INDUSTRIES

Project Number :

Client : SEYMOUR ENVIRONMENTAL SERVICES

Field ID : BOTTOM, 8.5'

Report Date : 8/20/98

Lab Sample Number : 884878-005

Collection Date : 8/13/98

WI DNR LAB ID : 405132750

Matrix Type : SOIL

Benzene	1900	120	290	ug/kg	8/19/98	MOD 8021B
Ethylbenzene	7400	120	290	ug/kg	8/19/98	MOD 8021B
Methyl-tert-butyl-ether	380	120	290	ug/kg	8/19/98	MOD 8021B
Toluene	32000	120	290	ug/kg	8/19/98	MOD 8021B
1,3,5-Trimethylbenzene	2600	120	290	ug/kg	8/19/98	MOD 8021B
1,2,4-Trimethylbenzene	8300	120	290	ug/kg	8/19/98	MOD 8021B
Xylenes, -m, -p	28000	120	290	ug/kg	8/19/98	MOD 8021B
Xylene, -o	11000	120	290	ug/kg	8/19/98	MOD 8021B

All soil results are reported on a dry weight basis unless otherwise noted.

EN CHEM INC.
1795 Industrial Drive
Green Bay, WI 54302
920-469-2436
800-7 ENCHEM
Fax: 920-469 8827

- Analytical Report -

Project Name : J-STAR INDUSTRIES
Project Number :
Field ID : MEOH BLANK
Lab Sample Number : 884878-006
WI DNR LAB ID : 405132750

Client : SEYMOUR ENVIRONMENTAL SERVICES
Report Date : 8/19/98
Collection Date : 8/13/98
Matrix Type : METHANOL

Organic Results

GASOLINE RANGE ORGANICS - METHANOL Prep Method: WI MOD.GRO Prep Date: 8/17/98 Analyst: PMS

Analyte	Result	LOD	LOQ	EQL	Units	Code	Analysis Date	Analysis Method
Gasoline Range Organics	< 2500			2500	ug/L		8/18/98	Wi MOD GRO
Blank Spike	106			1.00	%Recov		8/18/98	Wi MOD GRO
Blank Spike Duplicate	109			1.00	%Recov		8/18/98	Wi MOD GRO
Blank	< 50			50	ug/L		8/18/98	Wi MOD GRO

Organic Results

PVOC - METHANOL Prep Method: SW846 5030 Prep Date: 8/17/98 Analyst: PMS

Analyte	Result	LOD	LOQ	EQL	Units	Code	Analysis Date	Analysis Method
a,a,a-Trifluorotoluene	101				%Recov		8/18/98	MOD 8021B
Benzene	< 25	25	60		ug/l		8/18/98	MOD 8021B
Ethylbenzene	< 25	25	60		ug/l		8/18/98	MOD 8021B
Methyl-tert-butyl-ether	< 25	25	60		ug/l		8/18/98	MOD 8021B
Toluene	< 25	25	60		ug/l		8/18/98	MOD 8021B
1,3,5-Trimethylbenzene	< 25	25	60		ug/l		8/18/98	MOD 8021B
1,2,4-Trimethylbenzene	< 25	25	60		ug/l		8/18/98	MOD 8021B
Xylenes, -m, -p	< 25	25	60		ug/l		8/18/98	MOD 8021B
Xylene, -o	< 25	25	60		ug/l		8/18/98	MOD 8021B

CC Butler

State of Wisconsin \ DEPARTMENT OF NATURAL RESOURCES

Tommy G. Thompson, Governor
George E. Meyer, Secretary
Ruthe E. Badger, Regional Director

South Central Region Headquarters
3911 Fish Hatchery Road
Fitchburg, Wisconsin 53711-5397
Telephone 608-275-3266
FAX 608-275-3338
TDD 608-275-3231

October 5, 1998

File Ref: 03-28-198841

Mr J Michael Phelps
J-Star Industries Inc
801 Janesville Ave
Fort Atkinson WI 53538

Subject: J-Star Industries, 801 Janesville Avenue, Fort Atkinson

Dear Mr. Phelps:

On August 13, 1998 we were contacted regarding the above property. On September 15, 1998, confirmation results were received. During tank closure activities, contamination was found. Because contamination is present, an investigation will be needed.

The spill law authorizes the Department of Natural Resources to enforce cleanup of contaminated sites, under s. 292.11 of the Wisconsin Statutes. As the owner of the property where a hazardous substance discharge has occurred, you are required to determine the horizontal and vertical extent of contamination and clean-up/properly dispose of the contaminants.

Your legal responsibilities are defined both in statute and in administrative rules. The hazardous substance spill law, s. 292.11 (3) Wisconsin Statutes, states:

> RESPONSIBILITY. A person who possesses or controls a hazardous substance which is discharged or who causes the discharge of a hazardous substance shall take the actions necessary to restore the environment to the extent practicable and minimize the harmful effects from the discharge to the air, lands, or waters of the state.

Wisconsin Administrative Code NR 700 through NR 728 establishes requirements for interim actions, public information, site investigation, design and operation of remedial action systems, and case closure. Wisconsin Administrative Code NR 140 establishes groundwater standards.

It is important that an investigation begins at your site as soon as possible. The longer contamination is left in the environment, the farther it can spread and the more difficult and costly it becomes to cleanup. Since this cleanup must comply with Wisconsin laws and rules, professional engineering and hydrogeologic experience is necessary. Therefore, you should hire a professional environmental consultant who can assure you that Department policies and guidelines are being followed.

Your consultant will help you in providing the Department with the following:

- Submit written verification (such as a letter from the consultant) that you have hired an environmental consultant. **Please submit this information within 30 days of the date of this letter.**

- Submit an investigation workplan explaining what work will be performed to identify the extent of contamination. This workplan should include a time schedule. Also, please provide documentation of any previous work performed related to this release.

- Submit the investigation report defining the degree and extent of any soil and/or groundwater contamination.

- Provide a remedial action plan outlining the remedy selected.

- Provide a remedial action report with data supporting your consultant's conclusions and recommendations for future work or site closure.

In addition, you will be required to keep the Department informed on site progress by submitting 60 day updates. You will be notified when to provide the status reports at the time you submit your investigation workplan.

There are times when staffing levels do not allow us to keep current with workload demands. However, to maintain your compliance with the spill law and chs. NR 700 through NR 728, investigation and cleanup actions should not be unnecessarily delayed waiting for DNR responses. In the event that you experience delays, please refer to NR 716.09(3) regarding Department review of sites.

Your correspondence and reports regarding this site should be sent to Marilyn Jahnke, Department of Natural Resources, 3911 Fish Hatchery Road, Fitchburg WI 53711. Unless otherwise requested, please send only one copy of all plans and reports. Correspondence should be identified with the site name and address which is listed in the subject of this letter.

I have enclosed a list of environmental consultants and some important tips on selecting one. If you are eligible for Wisconsins' PECFA program (see end of letter), you will need to compare at least three consultant's proposals before making your selection. Also enclosed are materials on controlling costs, understanding the cleanup process, and choosing a site cleanup method. Please read this information carefully.

Reimbursement from the Petroleum Environmental Cleanup Fund (PECFA) is available for the costs of cleaning up the contamination from eligible petroleum storage tanks. The fund is administered by the Department of Commerce. Please contact DCOM at (608) 267-3753 for more information on eligibility and regulations for this program.

If you have any questions about this letter or your responsibilities, please call me at (608) 275-3212.

Sincerely,

Marilyn Jahnke, Program Assistant
Remediation & Redevelopment
Telephone: (608) 275-3212
jahnkm@dnr.state.wi.us

cc: Donald Kiesling, Godfrey & Kahn, SC, 780 N Water St, Milwaukee WI 53202

APPENDIX B

BORING LOGS, ABANDONMENT FORMS, AND WELL CONSTRUCTION AND DEVELOPMENT FORMS

of Wisconsin
tment of Natural Resources

SOIL BORING LOG INFORMATION

Form 4400-122 Rev. 7-98

Route To: Watershed/Wastewater ☐ Waste Management ☐
Remediation/Revelopment ☐ Other ☐ _____

Page 1 of 1

Facility/Project Name	License/Permit/Monitoring Number	Boring Number
J-Star Industries	_ _ _ _ _ _ _	SB-1

Drilling Drilled By: Name of crew chief (first, last) and Firm	Date Drilling Started	Date Drilling Completed	Drilling Method
First Name: Andy Last Name:	12/21/1998	12/21/1998	Geoprobe
Firm: SMG, Inc.			

Unique Well No.	DNR Well ID No.	Well Name	Final Static Water Level	Surface Elevation	Borehole Diameter
_ _ _ _ _ _	_ _ _		_____ Feet MSL	_____ Feet MSL	2 inches

Local Grid Origin ☐ (estimated: ☐) or Boring Location ☐
State Plane _____ N, _____ E S/C/N
SW 1/4 of SE 1/4 of Section 4, T 5 N, R 14 E/W
Lat ___ ° ___ ' ___ "
Long ___ ° ___ ' ___ "
Local Grid Location _____ Feet ☐ N ☐ S _____ Feet ☐ E ☐ W

Facility ID	County	County Code	Civil Town/City/ or Village
	Jefferson	27	Fort Atkinson

Sample Number	Sample Type	Length Att. & Recovered (in)	Blow Counts	Depth in Feet (Below ground surface)	Soil/Rock Description And Geologic Origin For Each Major Unit	USCS	Graphic Log	Well Diagram	PID/FID	Soil Properties: Compressive Strength	Moisture Content	Liquid Limit	Plasticity Index	P 200	RQD/ Comments
					Moist Brown/Black tight clay										
1		19"		2	Dry light brown sand with mixed gravel				6.7						
2		24"		4					6.5						
		18"		6					8.1						
4		18"		8	Moist tight grey clay with sand				1023						
		18"							286						
6		18"		10					325						
		18"		12					1083						
		18"		14	Moist tight grey silt with mixed sand				82.1						
		18"							64.4						
		18"		16	moist tight grey fine silt				71.5						
		18"							1130						
				18	E.O.B. 17'										

I hereby certify that the information on this form is true and correct to the best of my knowledge.

Signature	Firm
[signature]	Strand Associates, Inc.

This form is authorized by Chapters 281, 283, 289, 291, 292, 293, 295, and 299, Wis. Stats. Completion of this form is mandatory. Failure to file this form may result in forfeiture of between $10 and $25,000, or imprisonment for up to one year, depending on the program and conduct involved. Personally identifiable information on this form is not intended to be used for any other purpose. NOTE: See instructions for more information, including where the completed form should be sent.

Sample		Blow Counts	Depth in Feet	Soil/Rock Description And Geologic Origin For Each Major Unit	U S C S	Graphic Log	Well Diagram	PID/FID	Soil Properties					RQD/ Comments
and Type	Length Att. & Recovered (in)								Compressive Strength	Moisture Content	Liquid Limit	Plasticity Index	P 200	

J-Star GP 1

State of Wisconsin
Department of Natural Resources

WELL/DRILLHOLE/BOREHOLE ABANDONMENT

Form 3300-5B Rev. 7-89

All abandonment work shall be performed in accordance with the provisions of Chapters NR 111, NR 112 or NR 141, Wis. Admin. Code, whichever is applicable. Also, see instructions on back.

(1) GENERAL INFORMATION

Well/Drillhole/Borehole Location — County: Jefferson

SW 1/4 of SE 1/4 of Sec. 4 ; T. 5 N; R. 14 ☒ E ☐ W

(If applicable) _____ Gov't Lot _____ Grid Number

Grid Location _____ ft. ☐ N. ☐ S., _____ ft. ☐ E. ☐ W.

Civil Town Name

Street Address of Well: 801 Janesville Avenue

City, Village: Fort Atkinson

(2) FACILITY NAME

Original Well Owner (If Known)

Present Well Owner: J-Star Industries

Street or Route: 801 Janesville Ave.

City, State, Zip Code: Fort Atkinson, WI 53538

Facility Well No. and/or Name (If Applicable): SB-1 — WI Unique Well No.: ------

Reason For Abandonment: Temporary sampling well

Date of Abandonment: 12-21-1998

WELL/DRILLHOLE/BOREHOLE INFORMATION

(3) Original Well/Drillhole/Borehole Construction Completed On

(Date) 12-21-98

☐ Monitoring Well
☐ Water Well
☐ Drillhole
☒ Borehole

Construction Report Available? ☐ Yes ☒ No

Construction Type:
☒ Drilled ☐ Driven (Sandpoint) ☐ Dug
☐ Other (Specify) _____

Formation Type:
☒ Unconsolidated Formation ☐ Bedrock

Total Well Depth (ft.) 17' (From groundsurface) Casing Diameter (ins.) N/A

Casing Depth (ft.) N/A

Was Well Annular Space Grouted? ☐ Yes ☐ No ☐ Unknown
If Yes, To What Depth? _____ Feet

(4) Depth to Water (Feet) 17'

Pump & Piping Removed?	☐ Yes	☐ No	☐ Not Applicable
Liner(s) Removed?	☐ Yes	☐ No	☐ Not Applicable
Screen Removed?	☐ Yes	☐ No	☐ Not Applicable
Casing Left in Place?	☐ Yes	☐ No	

If No, Explain _____

Was Casing Cut Off Below Surface?	☐ Yes	☐ No
Did Sealing Material Rise to Surface?	☐ Yes	☐ No
Did Material Settle After 24 Hours?	☐ Yes	☐ No
If Yes, Was Hole Retopped?	☐ Yes	☐ No

(5) Required Method of Placing Sealing Material
☐ Conductor Pipe-Gravity ☐ Conductor Pipe-Pumped
☒ Dump Bailer ☐ Other (Explain)

(6) Sealing Materials
☐ Neat Cement Grout
☐ Sand-Cement (Concrete) Grout
☐ Concrete
☐ Clay-Sand Slurry
☐ Bentonite-Sand Slurry
☐ Chipped Bentonite

For monitoring wells and monitoring well boreholes only
☐ Bentonite Pellets
☒ Granular Bentonite

(7)

Sealing Material Used	From (Ft.)	To (Ft.)	No. Yards, Sacks Sealant or Volume	Mix Ratio or Mud Weight
Granular Cetco Bentonite	Surface	17		21.25 lbs

8) Comments: _____

Name of Person or Firm Doing Sealing Work: SMG, Inc.

Signature of Person Doing Work: [signature] — Date Signed: 18 Feb 99

Street or Route: 1648 Calico Ct — Telephone Number: (608) 825 7703

City, State, Zip Code: SUN PRAIRE, WI 53590

(10) FOR DNR OR COUNTY USE ONLY

Date Received/Inspected — District/County

Reviewer/Inspector

Follow-up Necessary

f Wisconsin
ment of Natural Resources

SOIL BORING LOG INFORMATION

Form 4400-122 Rev. 7-98

Route To: Watershed/Wastewater ☐ Waste Management ☐
Remediation/Revelopment ☐ Other ☐ _____

Page 1 of 1

cility/Project Name: [redacted]-star Industries	License/Permit/Monitoring Number: _ _ _ _ _ _ _	Boring Number: SB-2
ring Drilled By: Name of crew chief (first, last) and Firm — First Name: Andy Last Name: [redacted] SMG, Inc.	Date Drilling Started: 12/21/1998	Date Drilling Completed: 12/21/1998 — Drilling Method: Geoprobe
nique Well No.: _ _ _ _ _	DNR Well ID No.: _ _ _	Well Name:
	Final Static Water Level: _____ Feet MSL	Surface Elevation: _____ Feet MSL — Borehole Diameter: 2 inches
Grid Origin ☐ (estimated: ☐) or Boring Location ☐ — Plane _____ N, _____ E S/C/N	Lat ___ ° ___ ' ___ " Long ___ ° ___ ' ___ "	Local Grid Location: _____ Feet ☐ N ☐ S _____ Feet ☐ E ☐ W
N 1/4 of SE 1/4 of Section 4, T 5 N, R 14 (E)/W		
cility ID: [redacted]	County: Jefferson	County Code: 27 — Civil Town/City/ or Village: Fort Atkinson

Sample Number	Length Att. & Recovered (in)	Blow Counts	Depth in Feet (Below ground surface)	Soil/Rock Description And Geologic Origin For Each Major Unit	USCS	Graphic Log	Well Diagram	PID/FID	Soil Properties: Compressive Strength	Moisture Content	Liquid Limit	Plasticity Index	P 200	RQD/ Comments
				Dry brown loose medium Sand										
1	24"		2	Dry black tight clay with sand				2.3						
				Dry brown loose sand with gravel										
2	24"		4	Moist black/gray Tight clay				9.8						
			6											
3	36"							6.9						
			8											
4	36"		10					5.2						
				wet gray tight silt										
			12					6.2						
	36"			E.O.B. 13'										
			14											

[redacted]eby certify that the information on this form is true and correct to the best of my knowledge.

gnature: [redacted]	Firm: Strand Associates

This form is authorized by Chapters 281, 283, 289, 291, 292, 293, 295, and 299, Wis. Stats. Completion of this form is mandatory. Failure to file his form may result in forfeiture of between $10 and $25,000, or imprisonment for up to one year, depending on the program and conduct involved. [redacted]sonally identifiable information on this form is not intended to be used for any other purpose. NOTE: See instructions for more information, [redacted]uding where the completed form should be sent.

Sample		Blow Counts	Depth in Feet	Soil/Rock Description And Geologic Origin For Each Major Unit	U S C S	Graphic Log	Well Diagram	PID/FID	Soil Properties					RQD/ Comments
Number and Type	Length Att. & Recovered (in)								Compressive Strength	Moisture Content	Liquid Limit	Plasticity Index	P 200	

State of Wisconsin
Department of Natural Resources

J-Star GP 2

WELL/DRILLHOLE/BOREHOLE ABANDONMENT

Form 3300-5B
Rev. 7-89

All abandonment work shall be performed in accordance with the provisions of Chapters NR 111, NR 112 or NR 141, Wis. Admin. Code, whichever is applicable. Also, see instructions on back.

(1) GENERAL INFORMATION

Well/Drillhole/Borehole Location — County: Jefferson

SW 1/4 of SE 1/4 of Sec. 4 ; T. 5 N; R. 14 ☒ E ☐ W

(If applicable) Gov't Lot _____ Grid Number _____

Grid Location _____ ft. ☐ N. ☐ S., _____ ft. ☐ E. ☐ W.

Civil Town Name

Street Address of Well: 801 Janesville Ave.

City, Village: Fort Atkinson

(2) FACILITY NAME

Original Well Owner (If Known)

Present Well Owner: J-Star Industries

Street or Route: 801 Janesville Ave.

City, State, Zip Code: Fort Atkinson, WI 53538

Facility Well No. and/or Name (If Applicable): SB-2 — WI Unique Well No. _____

Reason For Abandonment: temporary sampling well

Date of Abandonment: 12-21-98

WELL/DRILLHOLE/BOREHOLE INFORMATION

(3) Original Well/Drillhole/Borehole Construction Completed On (Date) _____

☐ Monitoring Well
☐ Water Well
☐ Drillhole
☒ Borehole

Construction Report Available? ☐ Yes ☒ No

Construction Type: ☒ Drilled ☐ Driven (Sandpoint) ☐ Dug ☐ Other (Specify) _____

Formation Type: ☒ Unconsolidated Formation ☐ Bedrock

Total Well Depth (ft.) 13' (From groundsurface) Casing Diameter (ins.) N/A

Casing Depth (ft.) N/A

Was Well Annular Space Grouted? ☐ Yes ☐ No ☐ Unknown
If Yes, To What Depth? _____ Feet

(4) Depth to Water (Feet) 10'

Pump & Piping Removed?	☐ Yes	☐ No	☐ Not Applicable
Liner(s) Removed?	☐ Yes	☐ No	☐ Not Applicable
Screen Removed?	☐ Yes	☐ No	☐ Not Applicable
Casing Left in Place?	☐ Yes	☐ No	

If No, Explain _____

Was Casing Cut Off Below Surface?	☐ Yes	☐ No
Did Sealing Material Rise to Surface?	☐ Yes	☐ No
Did Material Settle After 24 Hours?	☐ Yes	☐ No
If Yes, Was Hole Retopped?	☐ Yes	☐ No

(5) Required Method of Placing Sealing Material
☐ Conductor Pipe-Gravity ☐ Conductor Pipe-Pumped
☒ Dump Bailer ☐ Other (Explain)

(6) Sealing Materials
☐ Neat Cement Grout
☐ Sand-Cement (Concrete) Grout
☐ Concrete
☐ Clay-Sand Slurry
☐ Bentonite-Sand Slurry
☐ Chipped Bentonite

For monitoring wells and monitoring well boreholes only
☐ Bentonite Pellets
☒ Granular Bentonite

(7) Sealing Material Used	From (Ft.)	To (Ft.)	No. Yards, Sacks Sealant or Volume	Mix Ratio or Mud Weight
Granular Cetco Bentonite	Surface	13		26.75 lbs

(8) Comments: _____

Name of Person or Firm Doing Sealing Work: SMG

Signature of Person Doing Work: [signature] — Date Signed: 18 Feb 99

Street or Route: _____ — Telephone Number: (608) 825 7703

City, State, Zip Code: 99 Sun Prairie WI 53590

(10) FOR DNR OR COUNTY USE ONLY

Date Received/Inspected _____ District/County _____

Reviewer/Inspector _____

Follow-up Necessary _____

Wisconsin
Department of Natural Resources

SOIL BORING LOG INFORMATION

Form 4400-122 Rev. 7-98

Route To: Watershed/Wastewater ☐ Waste Management ☐
Remediation/Revelopment ☐ Other ☐ _____

Page 1 of 1

Project Name	License/Permit/Monitoring Number	Boring Number
Star Industries		SB-3

Drilled By: Name of crew chief (first, last) and Firm	Date Drilling Started	Date Drilling Completed	Drilling Method
First Name: Andy Last Name: MG, Inc.	12/21/1998	12/21/1998	Geoprobe

Unique Well No.	DNR Well ID No.	Well Name	Final Static Water Level	Surface Elevation	Borehole Diameter
			Feet MSL	Feet MSL	2 inches

Grid Origin ☐ (estimated: ☐) or Boring Location ☐
State Plane _____ N, _____ E S/C/N
Lat ___ ° ___ ' ___ "
Long ___ ° ___ ' ___ "
Local Grid Location ☐ N ☐ E _____ Feet ☐ S _____ Feet ☐ W

1/4 of SE 1/4 of Section 4, T 5 N, R 14 (E/W)

County Code	County	Civil Town/City/ or Village
27	Jefferson	Fort Atkinson

Sample Length Recovered (in)	Blow Counts	Depth in Feet (below ground surface)	Soil/Rock Description And Geologic Origin For Each Major Unit	USCS	Graphic Log	Well Diagram	PID/FID	Compressive Strength	Moisture Content	Liquid Limit	Plasticity Index	P 200	RQD/ Comments
24"		2	Dry black tight clay				6.2						
24"		4	Dry brown loose sand with silt				6.2						
36"		6											
		8	wet brown/gray tight silty clay				6.2		▼				
36"		10					7.1						
		12	wet gray loose sand with fine silt				7.3						
6"		14	E.O.B. 13'										

I hereby certify that the information on this form is true and correct to the best of my knowledge.

Signature: Mike T. Hellemann Firm: Strand Associates

This form is authorized by Chapters 281, 283, 289, 291, 292, 293, 295, and 299, Wis. Stats. Completion of this form is mandatory. Failure to file it may result in forfeiture of between $10 and $25,000, or imprisonment for up to one year, depending on the program and conduct involved. Personally identifiable information on this form is not intended to be used for any other purpose. NOTE: See instructions for more information, including where the completed form should be sent.

nple Length Att. & Recovered (in)	Blow Counts	Depth in Feet	Soil/Rock Description And Geologic Origin For Each Major Unit	U S C S	Graphic Log	Well Diagram	PID/FID	Soil Properties: Compressive Strength	Moisture Content	Liquid Limit	Plasticity Index	P 200	RQD/ Comments

State of Wisconsin
Department of Natural Resources

GP 3 J Star

WELL/DRILLHOLE/BOREHOLE ABANDONMENT

Form 3300-5B Rev. 7-89

All abandonment work shall be performed in accordance with the provisions of Chapters NR 111, NR 112 or NR 141, Wis. Admin. Code, whichever is applicable. Also, see instructions on back.

(1) GENERAL INFORMATION

Well/Drillhole/Borehole Location — County: Jefferson

SW 1/4 of SE 1/4 of Sec. 4 ; T. 5 N; R. 14 [X] E [ ] W

(If applicable) Gov't Lot _____ Grid Number _____

Grid Location _____ ft. [ ] N. [ ] S., _____ ft. [ ] E. [ ] W.

Civil Town Name

Street Address of Well: 801 Janesville Ave.

City, Village: Fort Atkinson

(2) FACILITY NAME

Original Well Owner (If Known)

Present Well Owner: J-Star Industries

Street or Route: 801 Janesville Ave.

City, State, Zip Code: Fort Atkinson, WI 53538

Facility Well No. and/or Name (If Applicable): SB-3 — WI Unique Well No.

Reason For Abandonment: temporary sampling well

Date of Abandonment: 12-21-98

WELL/DRILLHOLE/BOREHOLE INFORMATION

(3) Original Well/Drillhole/Borehole Construction Completed On

(Date) 12-21-98

[ ] Monitoring Well
[ ] Water Well
[ ] Drillhole
[X] Borehole

Construction Report Available? [ ] Yes [X] No

Construction Type:
[X] Drilled [ ] Driven (Sandpoint) [ ] Dug
[ ] Other (Specify) _____

Formation Type:
[X] Unconsolidated Formation [ ] Bedrock

Total Well Depth (ft.) 13 (From groundsurface) Casing Diameter (ins.) N/A

Casing Depth (ft.) N/A

Was Well Annular Space Grouted? [ ] Yes [ ] No [ ] Unknown
If Yes, To What Depth? _____ Feet

(4) Depth to Water (Feet) 7'

Pump & Piping Removed?	[ ] Yes	[ ] No	[ ] Not Applicable
Liner(s) Removed?	[ ] Yes	[ ] No	[ ] Not Applicable
Screen Removed?	[ ] Yes	[ ] No	[ ] Not Applicable
Casing Left In Place?	[ ] Yes	[ ] No	

If No, Explain _____

Was Casing Cut Off Below Surface?	[ ] Yes	[ ] No
Did Sealing Material Rise to Surface?	[ ] Yes	[ ] No
Did Material Settle After 24 Hours?	[ ] Yes	[ ] No
If Yes, Was Hole Retopped?	[ ] Yes	[ ] No

(5) Required Method of Placing Sealing Material
[ ] Conductor Pipe-Gravity [ ] Conductor Pipe-Pumped
[X] Dump Bailer [ ] Other (Explain)

(6) Sealing Materials
[ ] Neat Cement Grout
[ ] Sand-Cement (Concrete) Grout
[ ] Concrete
[ ] Clay-Sand Slurry
[ ] Bentonite-Sand Slurry
[ ] Chipped Bentonite

For monitoring wells and monitoring well boreholes only
[ ] Bentonite Pellets
[X] Granular Bentonite

(7)

Sealing Material Used	From (Ft.)	To (Ft.)	No. Yards, Sacks Sealant or Volume	Mix Ratio or Mud Weight
Cetco Granular Bentonite	Surface	13		16.25 lb

(8) Comments:

(9) Name of Person or Firm Doing Sealing Work: SMG, Inc.

Signature of Person Doing Work: [signature] — Date Signed: 18 Feb 99

Street or Route: 1648 Calico — Telephone Number: (608) 825 7703

City, State, Zip Code: Madison WI 53590

(10) FOR DNR OR COUNTY USE ONLY

Date Received/Inspected — District/County

Reviewer/Inspector

Follow-up Necessary

of Wisconsin
tment of Natural Resources

SOIL BORING LOG INFORMATION

Form 4400-122 Rev. 7-98

Route To: Watershed/Wastewater ☐ Waste Management ☐
Remediation/Revelopment ☐ Other ☐ _____

Page 1 of 1

acility/Project Name: J-Star Industries	License/Permit/Monitoring Number: _ _ _ _ _ _ _	Boring Number: SB-4	
ing Drilled By: Name of crew chief (first, last) and Firm — First Name: Andy Last Name: — Firm: SMG, Inc.	Date Drilling Started: 12/21/1998 (m m d d y y y y)	Date Drilling Completed: 12/21/1998 (m m d d y y y y)	Drilling Method: Geoprobe
Unique Well No.: _ _ _ _ _	DNR Well ID No.: _ _ _	Well Name:	Final Static Water Level: _____ Feet MSL
Surface Elevation: _____ Feet MSL	Borehole Diameter: 2 inches		
al Grid Origin ☐ (estimated: ☐) or Boring Location ☐ — State Plane _____ N, _____ E S/C/N — 1/4 of SE 1/4 of Section 4, T 5 N, R 14 (E)W	Lat ___ ° ___ ' ___ " Long ___ ° ___ ' ___ "	Local Grid Location: _____ Feet ☐ N ☐ S _____ Feet ☐ E ☐ W	
acility ID	County: Jefferson	County Code: 27	Civil Town/City/ or Village: Fort Atkinson

Sample Number and Type	Length Att. & Recovered (in)	Blow Counts	Depth in Feet (Below ground surface)	Soil/Rock Description And Geologic Origin For Each Major Unit	USCS	Graphic Log	Well Diagram	PID/FID	Soil Properties: Compressive Strength	Moisture Content	Liquid Limit	Plasticity Index	P 200	RQD/ Comments
				Dry brown loose sand										
1	24"		2	Moist brown/gray tight clay				8.8						
	24"		4					6.9						
3	36"		6					6.1						
			8	moist brown sand - 2" seam										
4	36"		10	Moist brown tight silt				6.8						
				Moist gray tight clay										
	36"		12					7.0		▼				
			14	wet gray loose silt										
	36"		16					6.8						
				E.O.B@16'										

reby certify that the information on this form is true and correct to the best of my knowledge.

Signature	Firm
Robert T. Hellermann	Strand Associates

his form is authorized by Chapters 281, 283, 289, 291, 292, 293, 295, and 299, Wis. Stats. Completion of this form is mandatory. Failure to file his form may result in forfeiture of between $10 and $25,000, or imprisonment for up to one year, depending on the program and conduct involved. sonally identifiable information on this form is not intended to be used for any other purpose. NOTE: See instructions for more information, luding where the completed form should be sent.

Sample									Soil Properties					
and Type	Length Att. & Recovered (in.)	Blow Counts	Depth in Feet	Soil/Rock Description And Geologic Origin For Each Major Unit	U S C S	Graphic Log	Well Diagram	PID/FID	Compressive Strength	Moisture Content	Liquid Limit	Plasticity Index	P 200	RQD/ Comments

State of Wisconsin
Department of Natural Resources

GP4

WELL/DRILLHOLE/BOREHOLE ABANDONMENT

Form 3300-5B
Rev. 7-89

All abandonment work shall be performed in accordance with the provisions of Chapters NR 111, NR 112 or NR 141, Wis. Admin. Code, whichever is applicable. Also, see instructions on back.

(1) GENERAL INFORMATION

Well/Drillhole/Borehole Location — County: Jefferson

SW 1/4 of SE 1/4 of Sec. 4 ; T. 5 N; R. 14 [X] E [ ] W

(If applicable) Gov't Lot _____ Grid Number _____

Grid Location _____ ft. [ ] N. [ ] S., _____ ft. [ ] E. [ ] W.

Civil Town Name

Street Address of Well: 801 Janesville Ave

City, Village: Fort Atkinson

(2) FACILITY NAME

Original Well Owner (If Known)

Present Well Owner: J-Star Industries

Street or Route: 801 Janesville Ave

City, State, Zip Code: Fort Atkinson, WI 53538

Facility Well No. and/or Name (If Applicable): SB-4 — WI Unique Well No.: _____

Reason For Abandonment: temporary sampling well

Date of Abandonment: 12-21-98

WELL/DRILLHOLE/BOREHOLE INFORMATION

(3) Original Well/Drillhole/Borehole Construction Completed On

(Date) 12-21-98

[ ] Monitoring Well
[ ] Water Well
[ ] Drillhole
[X] Borehole

Construction Report Available? [ ] Yes [X] No

Construction Type:
[X] Drilled [ ] Driven (Sandpoint) [ ] Dug
[ ] Other (Specify) _____

Formation Type:
[X] Unconsolidated Formation [ ] Bedrock

Total Well Depth (ft.) 16 (From groundsurface) Casing Diameter (ins.) N/A

Casing Depth (ft.) N/A

Was Well Annular Space Grouted? [ ] Yes [ ] No [ ] Unknown
If Yes, To What Depth? _____ Feet

(4) Depth to Water (Feet) 13'

Pump & Piping Removed?	[ ] Yes	[ ] No	[ ] Not Applicable
Liner(s) Removed?	[ ] Yes	[ ] No	[ ] Not Applicable
Screen Removed?	[ ] Yes	[ ] No	[ ] Not Applicable
Casing Left in Place?	[ ] Yes	[ ] No	

If No, Explain _____

Was Casing Cut Off Below Surface?	[ ] Yes	[ ] No
Did Sealing Material Rise to Surface?	[ ] Yes	[ ] No
Did Material Settle After 24 Hours?	[ ] Yes	[ ] No
If Yes, Was Hole Retopped?	[ ] Yes	[ ] No

(5) Required Method of Placing Sealing Material
[ ] Conductor Pipe-Gravity [ ] Conductor Pipe-Pumped
[X] Dump Bailer [ ] Other (Explain)

(6) Sealing Materials
[ ] Neat Cement Grout
[ ] Sand-Cement (Concrete) Grout
[ ] Concrete
[ ] Clay-Sand Slurry
[ ] Bentonite-Sand Slurry
[ ] Chipped Bentonite

For monitoring wells and monitoring well boreholes only
[ ] Bentonite Pellets
[X] Granular Bentonite

(7)

Sealing Material Used	From (Ft.)	To (Ft.)	No. Yards, Sacks Sealant or Volume	Mix Ratio or Mud Weight
Granular Bentonite	Surface	16 ft		18.5 lbs

(8) Comments: _____

Name of Person or Firm Doing Sealing Work: SMG

Signature of Person Doing Work: G Jaffert — Date Signed: 18 Feb 99

Street or Route: 1648 Calko Ct — Telephone Number: (608) 825 7703

City, State, Zip Code: Sun Prairie WI 53703

(10) FOR DNR OR COUNTY USE ONLY

Date Received/Inspected — District/County

Reviewer/Inspector

Follow-up Necessary

State of Wisconsin
Department of Natural Resources

Route To:
- [ ] Solid Waste
- [ ] Emergency Response
- [ ] Wastewater
- [ ] Haz. Waste
- [X] Underground Tanks
- [ ] Water Resources
- [ ] Other _____

Soil Boring Log Information

Form 4400-122 1-96 DEC

Facility/Project Name: J Star Industries	License/Permit/Monitoring Number:	Boring Number: MW-1
Boring Drilled By (Firm name and name of crew chief): D. Cruise, Badger State Drilling Co., Inc.	Date Drilling Started: 8 30 99 (MM DD YY)	Date Drilling Completed: 8 30 99 (MM DD YY) / Drilling Method: 4 1/4 HSA
DNR Facility Well No.:	WI Unique Well No.: JS 557 / Common Well Name: MW-1	Final Static Water Level: 781.42 Feet MSL / Surface Elevation: 796.62 Feet MSL / Borehole Diameter: 8 Inches
Boring Location: State Plane _____ N, _____ E S/C/N; SW 1/4 of SE 1/4 of Section 4, T 5 N, R 14 (E)/W	Lat ___ N / Long ___ W	Local Grid Location (If applicable): ___ Feet [ ] N [ ] S, ___ Feet [ ] E [ ] W
County: Jefferson	DNR County Code: 27	Civil Town/ City/ or Village: 801 Janesville Ave. Fort Atkinson, WI

Sample Number	Length Recovered (in.)	Blow Counts	Depth in feet	Soil/Rock Description And Geologic Origin Each Major Unit	USCS	Graphic Log	Well Diagram	PID/FID	Standard Penetration	Moisture Content	Liquid Limit	Plastic Limit	P 200	RQD/ Comments
				1' Black silty top soil										
1	16	8	2	Loose sand, gravel (fill material)				15.2						
2	16	4	4					15.2						
3	2	2	6					—						
4	16	6	8					220						
				Stiff gray clay, trace silt										
5	16	7	10					210						
6	16	16	15	Stiff gray silt, fine sand				25						
7	16	16						25						
8	16	16	20					45						
				E.O.B. 20'5"										
			25											
			30											
			35											
			40											
			45											

I hereby certify that the information on this form is true and correct to the best of my knowledge.

Signature: [signature] Firm: Badger State Drilling Co., Inc.

This form is authorized by Chapters 144.147 and 162, Wis. Stats. Completion of this report is mandatory. Penalties: Forfeit not less than $10 nor more than $5000 for each violation. Fined not less than $10 or more than $100 or imprisoned not less than 30 days, or both for each violation. Each day of continued violation is a separate offense, pursuant to ss 144.99 and 162.06, Wis. Stats.

State of Wisconsin
Department of Natural Resources

Route to: Solid Waste ☐ Haz. Waste ☐ Wastewater ☐
Env. Response & Repair ☐ Underground Tanks ☒ Other ☐ _____

MONITORING WELL CONSTRUCTION
Form 4400-113A Rev. 4-90

Facility/Project Name -Star Industries	Local Grid Location of Well _____ ft. ☐N. ☐S. _____ ft. ☐E. ☐W.	Well Name MW-1
Facility License, Permit or Monitoring Number _-_____	Grid Origin Location Lat. 801 Janesville Ave. Long. _____ or St. Plane Fort Atkinson, WI ft. N. _____ ft. E.	Wis. Unique Well Number / DNR Well Number JS 557
Type of Well: Water Table Observation Well ☒ 11 Piezometer ☐ 12	Section Location of Waste/Source SW 1/4 of SE 1/4 of Sec. 4, T. 5 N, R. 14 ☒E. ☐W.	Date Well Installed 08 / 30 / 99 (m m / d d / y y)
Distance Well Is From Waste/Source Boundary 0 ft.	Location of Well Relative to Waste/Source u ☐ Upgradient s ☐ Sidegradient d ☐ Downgradient n ☐ Not Known	Well Installed By: (Person's Name and Firm) Dave Cruise Badger State Drilling
Is Well A Point of Enforcement Std. Application? ☒ Yes ☐ No		

Protective pipe, top elevation 22 ft. MSL

B. Well casing, top elevation 20 ft. MSL

C. Land surface elevation _____ ft. MSL

D. Surface seal, bottom _____ ft. MSL or _____ ft.

12. USCS classification of soil near screen:
GP ☐ GM ☐ GC ☐ GW ☐ SW ☐ SP ☐
SM ☐ SC ☐ ML ☐ MH ☐ CL ☐ CH ☐
Bedrock ☐

13. Sieve analysis attached? ☐ Yes ☒ No

14. Drilling method used: Rotary ☐ 50
Hollow Stem Auger ☒ 41
Other ☐ _____

15. Drilling fluid used: Water ☐ 02 Air ☐ 01
Drilling Mud ☐ 03 None ☒ 99

16. Drilling additives used? ☐ Yes ☒ No

Describe _____

17. Source of water (attach analysis):

_____

Bentonite seal, top _____ ft. MSL or 2.0 ft.

F. Fine sand, top _____ ft. MSL or 3.5 ft.

G. Filter pack, top _____ ft. MSL or 4.0 ft.

Screen joint, top _____ ft. MSL or 5.0 ft.

I. Well bottom _____ ft. MSL or 15.0 ft.

J. Filter pack, bottom _____ ft. MSL or 20.5 ft.

K. Borehole, bottom _____ ft. MSL or 20.5 ft.

L. Borehole, diameter 8.0 in.

M. O.D. well casing 2.375 in.

N. I.D. well casing 2.067 in.

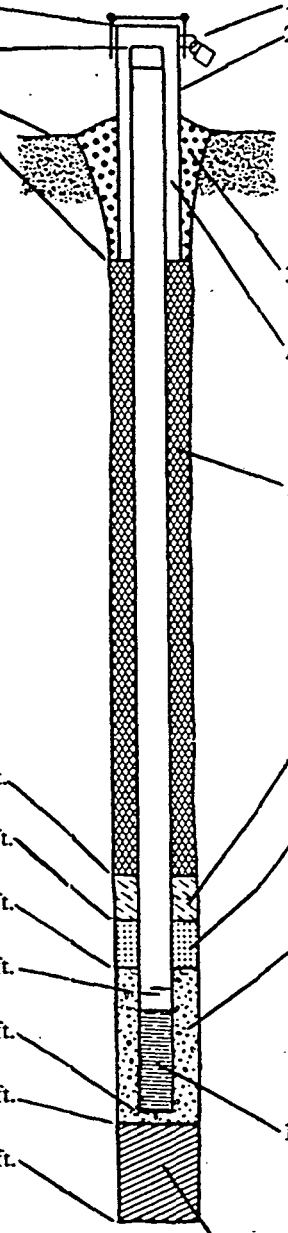

1. Cap and lock? ☒ Yes ☐ No
2. Protective cover pipe:
a. Inside diameter: 4.0 in.
b. Length: 5.0 ft.
c. Material: Steel ☒ 04
Other ☐ _____
d. Additional protection? ☐ Yes ☐ No
If yes, describe: _____
3. Surface seal: Bentonite ☒ 30
Concrete ☐ 01
Other ☐ _____
4. Material between well casing and protective pipe:
Bentonite ☐ 30
Annular space seal ☐
Filter Sand Other ☒
5. Annular space seal: a. Granular Bentonite ☒ 33
b. _____ Lbs/gal mud weight . . . Bentonite-sand slurry ☐ 35
c. _____ Lbs/gal mud weight . . . . . Bentonite slurry ☐ 31
d. _____ % Bentonite . . . . . Bentonite-cement grout ☐ 50
e. .45 Ft^3 volume added for any of the above
f. How installed: Tremie ☐ 01
Tremie pumped ☐ 02
Gravity ☒ 08
6. Bentonite seal: a. Bentonite granules ☐ 33
b. ☐1/4 in. ☒3/8 in. ☐1/2 in. Bentonite pellets ☐ 32
c. Bentonite Chips Other ☐
7. Fine sand material: Manufacturer, product name & mesh size
a. 40-60 Ohio
b. Volume added .3 ft^3
8. Filter pack material: Manufacturer, product name and mesh size
a. 1.0-2.0 Ohio
b. Volume added 4.8 ft^3
9. Well casing: Flush threaded PVC schedule 40 ☒ 23
Flush threaded PVC schedule 80 ☐ 24
Other ☐ _____
10. Screen material: Sch. 40 PVC
a. Screen type: Factory cut ☒ 11
Continuous slot ☐ 01
Other ☐ _____
b. Manufacturer Timco
c. Slot size: 0.010 in.
d. Slotted length: 10.0 ft.
11. Backfill material (below filter pack): None ☐ 14
Other ☐ _____

I hereby certify that the information on this form is true and correct to the best of my knowledge.

Signature _____ Firm Badger State Drilling, Inc.

Please complete both sides of this form and return to the appropriate DNR office listed at the top of this form as required by chs. 144, 147 and 160, Wis. Stats., and ch. NR 141, Wis. Ad. Code. In accordance with ch.144, Wis Stats., failure to file this form may result in a forfeiture of not less than $10, nor more than $5000 for each day of violation. In accordance with ch. 147, Wis. Stats., failure to file this form may result in a forfeiture of not more than $10,000 for each day of violation. NOTE: Shaded areas are for DNR use only. See instructions for more information including where the completed form should be sent.

State of Wisconsin
Department of Natural Resources

MONITORING WELL DEVELOPMENT
Form 4400-113B Rev. 4-90

Route to: Solid Waste ☐ Haz. Waste ☐ Wastewater ☐
Env. Response & Repair ☐ Underground Tanks ☒ Other ☐ _____

Facility/Project Name	County Name	Well Name
J-Star Industries	Jefferson	MW-1

Facility License, Permit or Monitoring Number	County Code	Wis. Unique Well Number	DNR Well Number
_____	27	JS 557	___

1. Can this well be purged dry? ☐ Yes ☒ No

2. Well development method
   - surged with bailer and bailed ☐ 41
   - surged with bailer and pumped ☒ 61
   - surged with block and bailed ☐ 42
   - surged with block and pumped ☐ 62
   - surged with block, bailed and pumped ☐ 70
   - compressed air ☐ 20
   - bailed only ☐ 10
   - pumped only ☐ 51
   - pumped slowly ☐ 50
   - Other _____ ☐ ___

3. Time spent developing well ____ min.

4. Depth of well (from top of well casisng) 17.2 ft.

5. Inside diameter of well 2.067 in.

6. Volume of water in filter pack and well casing ____.__ gal.

7. Volume of water removed from well 40.0 gal.

8. Volume of water added (if any) ____.__ gal.

9. Source of water added _____

10. Analysis performed on water added? ☐ Yes ☐ No
(If yes, attach results)

	Before Development	After Development
11. Depth to Water (from top of well casing)	a. 9.33 ft.	15.20 ft.
Date	b. 08 / 31 / 99 (m m d d y y)	08 / 31 / 99 (m m d d y y)
Time	c. 9:30 ☒ a.m. ☐ p.m.	__:__ ☒ a.m. ☐ p.m.
12. Sediment in well bottom	0.1 inches	0.0 inches
13. Water clarity	Clear ☐ 10 Turbid ☒ 15 (Describe) Dark grey	Clear ☒ 20 Turbid ☐ 25 (Describe)

Fill in if drilling fluids were used and well is at solid waste facility:

14. Total suspended solids	____.__ mg/l	____.__ mg/l
15. COD	____.__ mg/l	____.__ mg/l

16. Additional comments on development:

Well developed by: Person's Name and Firm

Name: Dave Cruise

Firm: Badger State Drilling, Inc.

I hereby certify that the above information is true and correct to the best of my knowledge.

Signature: [signature]

Print Initials: MAG

Firm: Badger State Drilling, Inc.

NOTE: Shaded areas are for DNR use only. See instructions for more information including a list of county codes.

State of Wisconsin
Department of Natural Resources

Route To:
- [ ] Solid Waste
- [ ] Emergency Response
- [ ] Wastewater
- [ ] Haz. Waste
- [X] Underground Tanks
- [ ] Water Resources
- [ ] Other _____

Soil Boring Log Information

Form 4400-122 1-96 DEC

Facility/Project Name: J Star Industries	License/Permit/Monitoring Number:	Boring Number: MW-2
Boring Drilled By (Firm name and name of crew chief): D. Cruise, Badger State Drilling Co., Inc.	Date Drilling Started: 8 (MM) 30 (DD) 99 (YY)	Date Drilling Completed: 8 (MM) 30 (DD) 99 (YY) — Drilling Method: 4 1/4 HSA
DNR Facility Well No.:	WI Unique Well No.: JS559 — Common Well Name: MW-2	Final Static Water Level: 780.50 Feet MSL — Surface Elevation: 797.30 Feet MSL — Borehole Diameter: 8 Inches
Boring Location: State Plane _____ N, _____ E S/C/N; SW 1/4 of SE 1/4 of Section 4, T 5 N, R 14 (E)/W	Lat ___ N; Long ___ W	Local Grid Location (If applicable): [ ] N [ ] E ___ Feet [ ] S ___ Feet [ ] W
County: Jefferson	DNR County Code: 27	Civil Town/ City/ or Village: 801 Janesville Ave. Fort Atkinson, WI

Sample Number	Length Recovered (in.)	Blow Counts	Depth in feet	Soil/Rock Description And Geologic Origin Each Major Unit	USCS	Graphic Log	Well Diagram	PID/FID	Standard Penetration	Moisture Content	Liquid Limit	Plastic Limit	P 200	RQD/ Comments
				3" Asphalt 9" gravel base										
1	18	15	2	Cinders, sand fill				—						
2	18	21	4	Loose, brown, fine sand				21.4						
3	16	3	6					21.7						
				Soft black organics										
4	16	3	8					21.2						
5	16	8	10					22.4						
				Medium to stiff gray clay, trace silt										
6	16	9	15	trace fine sand				20.6						
7	16	12						20.7						
8	16	18	20					31						
				E.O.B. 20'5"										
			25											
			30											
			35											
			40											
			45											

I hereby certify that the information on this form is true and correct to the best of my knowledge.

Signature: [signature] — Firm: Badger State Drilling Co., Inc.

This form is authorized by Chapters 144.147 and 162, Wis. Stats. Completion of this report is mandatory. Penalties: Forfeit not less than $10 nor more than $5000 for each violation. Fined not less than $10 or more than $100 or imprisoned not less than 30 days, or both for each violation. Each day of continued violation is a separate offense, pursuant to ss 144.99 and 162.06, Wis. Stats.

State of Wisconsin
Department of Natural Resources

Route to: Solid Waste ☐ Haz. Waste ☐ Wastewater ☐
Env. Response & Repair ☐ Underground Tanks ☒ Other ☐ _____

MONITORING WELL CONSTRUCTION
Form 4400-113A Rev. 4-90

Facility/Project Name: U-Star Industries	Local Grid Location of Well: ____ ft. ☐N. ☐S. ____ ft. ☐E. ☐W.	Well Name: MW-2
Facility License, Permit or Monitoring Number: _-_____	Grid Origin Location: Lat. 801 Janesville Ave. Long. _____ or St. Plane Fort Atkinson ft. N. _____ ft. E.	Wis. Unique Well Number: JS 559 DNR Well Number: ____
Type of Well: Water Table Observation Well ☒ 11; Piezometer ☐ 12	Section Location of Waste/Source: SW 1/4 of SE 1/4 of Sec. 4, T. 5 N, R. 14 ☒E. ☐W.	Date Well Installed: 08 / 30 / 99 (m m / d d / y y)
Distance Well Is From Waste/Source Boundary: 30 ft.	Location of Well Relative to Waste/Source: u ☒ Upgradient; s ☐ Sidegradient; d ☐ Downgradient; n ☐ Not Known	Well Installed By: (Person's Name and Firm) Dave Cruise; Badger State Drilling
Is Well A Point of Enforcement Std. Application? ☒ Yes ☐ No		

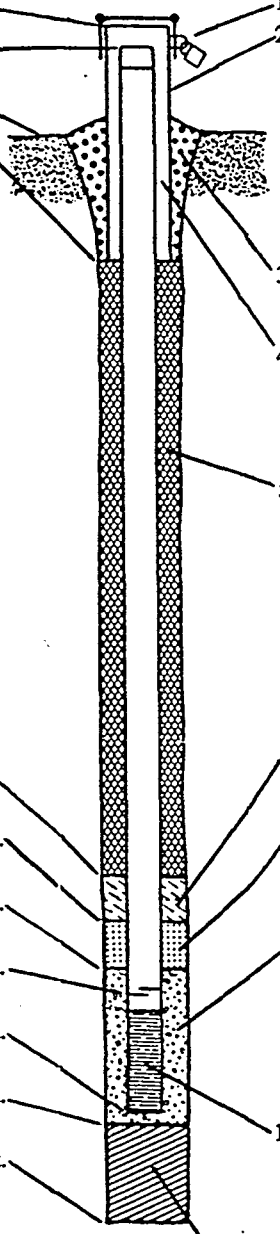

Protective pipe, top elevation: Flush ft. MSL

B. Well casing, top elevation: -.3 ft. MSL

C. Land surface elevation: ____ ft. MSL

D. Surface seal, bottom: ____ ft. MSL or ____ ft.

E. USCS classification of soil near screen:
GP ☐ GM ☐ GC ☐ GW ☐ SW ☐ SP ☐
SM ☐ SC ☐ ML ☐ MH ☐ CL ☐ CH ☐
Bedrock ☐

F. Sieve analysis attached? ☐ Yes ☒ No

G. Drilling method used: Rotary ☐ 50; Hollow Stem Auger ☒ 41; Other ☐ ____

H. Drilling fluid used: Water ☐ 02; Air ☐ 01; Drilling Mud ☐ 03; None ☒ 99

I. Drilling additives used? ☐ Yes ☒ No

Describe _____

J. Source of water (attach analysis): _____

K. Bentonite seal, top: ____ ft. MSL or 2.0 ft.

L. Fine sand, top: ____ ft. MSL or 4.0 ft.

M. Filter pack, top: ____ ft. MSL or 5.0 ft.

N. Screen joint, top: ____ ft. MSL or 7.0 ft.

O. Well bottom: ____ ft. MSL or 17.0 ft.

P. Filter pack, bottom: ____ ft. MSL or 20.5 ft.

Q. Borehole, bottom: ____ ft. MSL or 20.5 ft.

R. Borehole, diameter: 8.0 in.

S. O.D. well casing: 2.375 in.

T. I.D. well casing: 2.067 in.

1. Cap and lock? ☒ Yes ☐ No
2. Protective cover pipe:
   a. Inside diameter: 9.0 in.
   b. Length: 1.0 ft.
   c. Material: Steel ☒ 04; Other ☐ ____
   d. Additional protection? ☐ Yes ☐ No
      If yes, describe: _____
3. Surface seal: Bentonite ☐ 30; Concrete ☒ 01; Other ☐ ____
4. Material between well casing and protective pipe: Bentonite ☐ 30; Annular space seal ☐ ____; Filter Sand; Other ☒ ____
5. Annular space seal:
   a. Granular Bentonite ☒ 33
   b. ____ Lbs/gal mud weight . . . Bentonite-sand slurry ☐ 35
   c. ____ Lbs/gal mud weight . . . . . Bentonite slurry ☐ 31
   d. ____ % Bentonite . . . . . Bentonite-cement grout ☐ 50
   e. .6 Ft^3 volume added for any of the above
   f. How installed: Tremie ☐ 01; Tremie pumped ☐ 02; Gravity ☒ 08
6. Bentonite seal:
   a. Bentonite granules ☐ 33
   b. ☐1/4 in. ☒3/8 in. ☐1/2 in. Bentonite pellets ☐ 32
   c. Bentonite Chips; Other ☐ ____
7. Fine sand material: Manufacturer, product name & mesh size
   a. 40-60 Ohio ____
   b. Volume added .3 ft^3
8. Filter pack material: Manufacturer, product name and mesh size
   a. 1.0-2.0 Ohio ____
   b. Volume added 4.5 ft^3
9. Well casing: Flush threaded PVC schedule 40 ☒ 23; Flush threaded PVC schedule 80 ☐ 24; Other ☐ ____
10. Screen material: Sch. 40 PVC ____
    a. Screen type: Factory cut ☒ 11; Continuous slot ☐ 01; Other ☐ ____
    b. Manufacturer Timco
    c. Slot size: 0.010 in.
    d. Slotted length: 10.0 ft.
11. Backfill material (below filter pack): None ☐ 14; Other ☐ ____

I hereby certify that the information on this form is true and correct to the best of my knowledge.

Signature: [signature] Firm: Badger State Drilling, Inc.

Please complete both sides of this form and return to the appropriate DNR office listed at the top of this form as required by chs. 144, 147 and 160, Wis. Stats., and ch. NR 141, Wis. Ad. Code. In accordance with ch.144, Wis Stats., failure to file this form may result in a forfeiture of not less than $10, nor more than $5000 for each day of violation. In accordance with ch. 147, Wis. Stats., failure to file this form may result in a forfeiture of not more than $10,000 for each day of violation. NOTE: Shaded areas are for DNR use only. See instructions for more information including where the completed form should be sent.

State of Wisconsin
Department of Natural Resources

MONITORING WELL DEVELOPMENT
Form 4400-113B Rev. 4-90

Route to: Solid Waste ☐ Haz. Waste ☐ Wastewater ☐
Env. Response & Repair ☐ Underground Tanks ☒ Other ☐ _____

Facility/Project Name	County Name	Well Name
J-Star Industries	Jefferson	MW-2

Facility License, Permit or Monitoring Number	County Code	Wis. Unique Well Number	DNR Well Number
_____	27	JS 559	___

1. Can this well be purged dry? ☒ Yes ☐ No

2. Well development method

surged with bailer and bailed	☒ 41
surged with bailer and pumped	☐ 61
surged with block and bailed	☐ 42
surged with block and pumped	☐ 62
surged with block, bailed and pumped	☐ 70
compressed air	☐ 20
bailed only	☐ 10
pumped only	☐ 51
pumped slowly	☐ 50
Other _____	☐

3. Time spent developing well 15 min.

4. Depth of well (from top of well casisng) 17.0 ft.

5. Inside diameter of well 2.067 in.

6. Volume of water in filter pack and well casing ___.__ gal.

7. Volume of water removed from well 3.0 gal.

8. Volume of water added (if any) ___.__ gal.

9. Source of water added _____

10. Analysis performed on water added? ☐ Yes ☐ No
(If yes, attach results)

	Before Development	After Development
11. Depth to Water (from top of well casing)	a. 13.65 ft.	16.50 ft.
Date	b. 08/31/99 (mm dd yy)	08/31/99 (mm dd yy)
Time	c. 10:45 ☒ a.m. ☐ p.m.	11:00 ☒ a.m. ☐ p.m.
12. Sediment in well bottom	0.1 inches	0.0 inches
13. Water clarity	Clear ☐ 10 Turbid ☒ 15 (Describe) Light gray	Clear ☐ 20 Turbid ☒ 25 (Describe) Light gray

Fill in if drilling fluids were used and well is at solid waste facility:

14. Total suspended solids	____.__ mg/l	____.__ mg/l
15. COD	____.__ mg/l	____.__ mg/l

16. Additional comments on development:

Bail Dry 3 Times

Well developed by: Person's Name and Firm

Name: Dave Cruise

Firm: Badger State Drilling, Inc.

I hereby certify that the above information is true and correct to the best of my knowledge.

Signature: [signature]

Print Initials: MAG

Firm: Badger State Drilling, Inc.

NOTE: Shaded areas are for DNR use only. See instructions for more information including a list of county codes.

State of Wisconsin
Department of Natural Resources

Route To:
- [ ] Solid Waste
- [ ] Emergency Response
- [ ] Wastewater
- [ ] Haz. Waste
- [X] Underground Tanks
- [ ] Water Resources
- [ ] Other _____

Soil Boring Log Information

Form 4400-122 1-96 DEC

Facility/Project Name: J Star Industries	License/Permit/Monitoring Number:	Boring Number: MW-3
Boring Drilled By (Firm name and name of crew chief): D. Cruise, Badger State Drilling Co., Inc.	Date Drilling Started: 8 30 99 (MM DD YY)	Date Drilling Completed: 8 30 99 (MM DD YY) / Drilling Method: 4 1/4 HSA
DNR Facility Well No.:	WI Unique Well No.: JS560 / Common Well Name: MW-3	Final Static Water Level: 782.97 Feet MSL / Surface Elevation: 797.68 Feet MSL / Borehole Diameter: 8 Inches
Boring Location: State Plane _____ N, _____ E S/C/N; SW 1/4 of SE 1/4 of Section 4, T 5 N, R 14 (E) W	Lat ___ N / Long ___ W	Local Grid Location (If applicable): ___ Feet [ ] N [ ] S, ___ Feet [ ] E [ ] W
County: Jefferson	DNR County Code: 27	Civil Town/ City/ or Village: 801 Janesville Ave. Fort Atkinson, WI

Sample Number	Length Recovered (in.)	Blow Counts	Depth in feet	Soil/Rock Description And Geologic Origin Each Major Unit	USCS	Graphic Log	Well Diagram	PID/FID	Standard Penetration	Moisture Content	Liquid Limit	Plastic Limit	P 200	RQD/ Comments
				3" Asphalt 9" gravel base										
1	16	23	2	Sand gravel black cinder (fill material)				10.3						
2	16	8	4					29.3						
3	16	8	6					15.1						
4	16	11	8	Medium-dense gray sand, trace gray clay organics				13.3						
5	16	9	10	Gray sand, trace silt				14.3						
6	16	11	15	Still gray clay, trace silt				14.3						
7	16	9						22.7						
8	16	14	20					20.7						
				E.O.B. 20'5"										
			25											
			30											
			35											
			40											
			45											

I hereby certify that the information on this form is true and correct to the best of my knowledge.

Signature: [signature] Firm: Badger State Drilling Co., Inc.

This form is authorized by Chapters 144.147 and 162, Wis. Stats. Completion of this report is mandatory. Penalties: Forfeit not less than $10 nor more than $5000 for each violation. Fined not less than $10 or more than $100 or imprisoned not less than 30 days, or both for each violation. Each day of continued violation is a separate offense, pursuant to ss 144.99 and 162.06, Wis. Stats.

State of Wisconsin
Department of Natural Resources

Route to: Solid Waste ☐ Haz. Waste ☐ Wastewater ☐
Env. Response & Repair ☐ Underground Tanks ☒ Other ☐ _____

MONITORING WELL CONSTRUCTION
Form 4400-113A Rev. 4-90

Facility/Project Name: J-Star Industries	Local Grid Location of Well: ____ ft. ☐N. ☐S. ____ ft. ☐E. ☐W.	Well Name: MW-3
Facility License, Permit or Monitoring Number: ____	Grid Origin Location: Lat. 801 Janesville Ave. Long. ____ or St. Plane Fort Atkinson, WI ft. N. ____ ft. E.	Wis. Unique Well Number: JS 560 DNR Well Number: ____
Type of Well: Water Table Observation Well ☒ 11; Piezometer ☐ 12	Section Location of Waste/Source: SW 1/4 of SE 1/4 of Sec. 4, T. 5 N, R. 14 ☒E. ☐W.	Date Well Installed: 08/31/99 (m m / d d / y y)
Distance Well Is From Waste/Source Boundary: 10 ft.	Location of Well Relative to Waste/Source: u ☐ Upgradient; s ☒ Sidegradient; d ☐ Downgradient; n ☐ Not Known	Well Installed By: (Person's Name and Firm) Dave Cruise, Badger State Drilling
Is Well A Point of Enforcement Std. Application? ☒ Yes ☐ No		

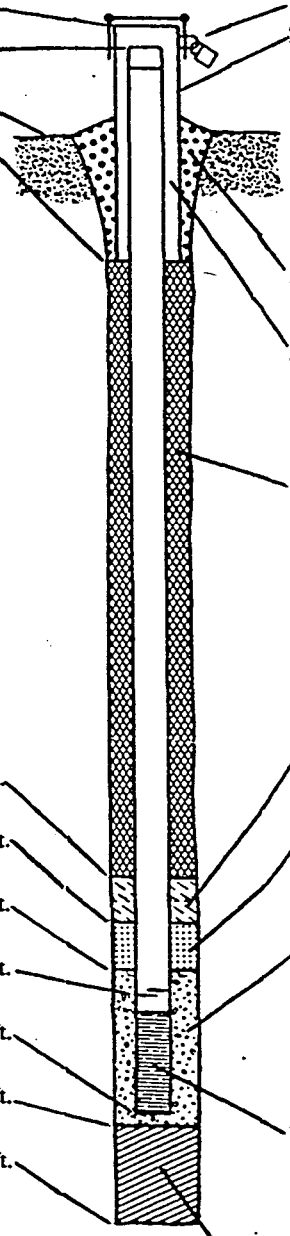

Protective pipe, top elevation: Flush ft. MSL

B. Well casing, top elevation: -2 ft. MSL

Land surface elevation: ____ ft. MSL

D. Surface seal, bottom: ____ ft. MSL or ____ ft.

2. USCS classification of soil near screen:
GP ☐ GM ☐ GC ☐ GW ☐ SW ☐ SP ☐
SM ☐ SC ☐ ML ☐ MH ☐ CL ☐ CH ☐
Bedrock ☐

3. Sieve analysis attached? ☐ Yes ☒ No

4. Drilling method used: Rotary ☐ 50; Hollow Stem Auger ☒ 41; Other ☐ ____

5. Drilling fluid used: Water ☐ 02; Air ☐ 01; Drilling Mud ☐ 03; None ☒ 99

6. Drilling additives used? ☐ Yes ☒ No

Describe ____

7. Source of water (attach analysis): ____

Bentonite seal, top: ____ ft. MSL or 1.5 ft.

F. Fine sand, top: ____ ft. MSL or 3.0 ft.

G. Filter pack, top: ____ ft. MSL or 4.0 ft.

Screen joint, top: ____ ft. MSL or 5.0 ft.

I. Well bottom: ____ ft. MSL or 15.0 ft.

Filter pack, bottom: ____ ft. MSL or 20.5 ft.

K. Borehole, bottom: ____ ft. MSL or 20.5 ft.

L. Borehole, diameter: 8.0 in.

M. O.D. well casing: 2.375 in.

N. I.D. well casing: 2.067 in.

1. Cap and lock? ☒ Yes ☐ No

2. Protective cover pipe:
a. Inside diameter: 9.0 in.
b. Length: 1.0 ft.
c. Material: Steel ☒ 04; Other ☐ ____
d. Additional protection? ☐ Yes ☐ No
If yes, describe: ____

3. Surface seal: Bentonite ☐ 30; Concrete ☒ 01; Other ☐ ____

4. Material between well casing and protective pipe: Bentonite ☐ 30; Annular space seal ☐ ____; Other ☒ Filter Sand

5. Annular space seal: a. Granular Bentonite ☒ 33
b. ____ Lbs/gal mud weight . . . Bentonite-sand slurry ☐ 35
c. ____ Lbs/gal mud weight . . . . . Bentonite slurry ☐ 31
d. ____ % Bentonite . . . . . Bentonite-cement grout ☐ 50
e. .45 Ft^3 volume added for any of the above
f. How installed: Tremie ☐ 01; Tremie pumped ☐ 02; Gravity ☒ 08

6. Bentonite seal: a. Bentonite granules ☐ 33
b. ☐1/4 in. ☒3/8 in. ☐1/2 in. Bentonite pellets ☐ 32
c. Bentonite chips Other ☐ ____

7. Fine sand material: Manufacturer, product name & mesh size
a. 40-60 Ohio
b. Volume added .3 ft^3

8. Filter pack material: Manufacturer, product name and mesh size
a. 1.0-2.0 Ohio
b. Volume added 4.8 ft^3

9. Well casing: Flush threaded PVC schedule 40 ☒ 23; Flush threaded PVC schedule 80 ☐ 24; Other ☐ ____

10. Screen material: Sch. 40 PVC
a. Screen type: Factory cut ☒ 11; Continuous slot ☐ 01; Other ☐ ____
b. Manufacturer Timco
c. Slot size: 0.010 in.
d. Slotted length: 10.0 ft.

11. Backfill material (below filter pack): None ☐ 14; Other ☐ ____

I hereby certify that the information on this form is true and correct to the best of my knowledge.

Signature: [signature] Firm: Badger State Drilling, Inc.

Please complete both sides of this form and return to the appropriate DNR office listed at the top of this form as required by chs. 144, 147 and 160, Wis. Stats., and ch. NR 141, Wis. Ad. Code. In accordance with ch.144, Wis Stats., failure to file this form may result in a forfeiture of not less than $10, nor more than $5000 for each day of violation. In accordance with ch. 147, Wis. Stats., failure to file this form may result in a forfeiture of not more than $10,000 for each day of violation. NOTE: Shaded areas are for DNR use only. See instructions for more information including where the completed form should be sent.

State of Wisconsin
Department of Natural Resources

MONITORING WELL DEVELOPMENT
Form 4400-113B Rev. 4-90

Route to: Solid Waste ☐ Haz. Waste ☐ Wastewater ☐
Env. Response & Repair ☐ Underground Tanks ☒ Other ☐ _____

Facility/Project Name	County Name	Well Name
J-Star Industries	Jefferson	MW-3

Facility License, Permit or Monitoring Number	County Code	Wis. Unique Well Number	DNR Well Number
_____	27	JS 560	_____

1. Can this well be purged dry? ☐ Yes ☐ No

2. Well development method
   - surged with bailer and bailed ☐ 41
   - surged with bailer and pumped ☐ 61
   - surged with block and bailed ☐ 42
   - surged with block and pumped ☐ 62
   - surged with block, bailed and pumped ☐ 70
   - compressed air ☐ 20
   - bailed only ☐ 10
   - pumped only ☐ 51
   - pumped slowly ☐ 50
   - Other _____ ☐ ___

3. Time spent developing well ____ min.

4. Depth of well (from top of well casisng) 14.7 ft.

5. Inside diameter of well 2.067 in.

6. Volume of water in filter pack and well casing ____.__ gal.

7. Volume of water removed from well ____.__ gal.

8. Volume of water added (if any) ____.__ gal.

9. Source of water added _____

10. Analysis performed on water added? ☐ Yes ☐ No
(If yes, attach results)

	Before Development	After Development
11. Depth to Water (from top of well casing)	a. Dry .__ ft.	____.__ ft.
Date	b. 08 / 31 / 99 (mm dd yy)	08 / 31 / 99 (mm dd yy)
Time	c. __:__ ☐ a.m. ☐ p.m.	__:__ ☐ a.m. ☐ p.m.
12. Sediment in well bottom	__.__ inches	__.__ inches
13. Water clarity	Clear ☐ 10 Turbid ☐ 15 (Describe)	Clear ☐ 20 Turbid ☐ 25 (Describe)

Fill in if drilling fluids were used and well is at solid waste facility:

14. Total suspended solids	____.__ mg/l	____.__ mg/l
15. COD	____.__ mg/l	____.__ mg/l

16. Additional comments on development:

Did not develope, dry

Well developed by: Person's Name and Firm

Name: Dave Cruise

Firm: Badger State Drilling, Inc.

I hereby certify that the above information is true and correct to the best of my knowledge.

Signature: [signature]

Print Initials: MAG

Firm: Badger State Drilling, Inc.

NOTE: Shaded areas are for DNR use only. See instructions for more information including a list of county codes.

State of Wisconsin
Department of Natural Resources

Route To:
- [ ] Solid Waste
- [ ] Emergency Response
- [ ] Wastewater
- [ ] Haz. Waste
- [X] Underground Tanks
- [ ] Water Resources
- [ ] Other _____

Soil Boring Log Information

Form 4400-122 1-96 DEC

Facility/Project Name: J Star Industries	License/Permit/Monitoring Number:	Boring Number: MW-4
Boring Drilled By (Firm name and name of crew chief): D. Cruise, Badger State Drilling Co., Inc.	Date Drilling Started: 8 30 99 (MM DD YY)	Date Drilling Completed: 8 30 99 (MM DD YY) / Drilling Method: 4 1/4 HSA
DNR Facility Well No.:	WI Unique Well No.: JS556 / Common Well Name: MW-4	Final Static Water Level: 781.04 Feet MSL / Surface Elevation: 795.53 Feet MSL / Borehole Diameter: 8 Inches
Boring Location: State Plane _____ N, _____ E S/C/N; SW 1/4 of SE 1/4 of Section 4, T 5 N, R 14 (E) W	Lat ___ ___ ___ N; Long ___ ___ ___ W	Local Grid Location (If applicable): ___ Feet [ ] N [ ] S; ___ Feet [ ] E [ ] W
County: Jefferson	DNR County Code: 27	Civil Town/ City/ or Village: 801 Janesville Ave. Fort Atkinson, WI

Sample Number	Length Recovered (in.)	Blow Counts	Depth in feet	Soil/Rock Description And Geologic Origin Each Major Unit	USCS	Graphic Log	Well Diagram	PID/FID	Standard Penetration	Moisture Content	Liquid Limit	Plastic Limit	P 200	RQD/ Comments
				10" Concrete 2" gravel base										
1	16	4	2	Loose brown, fine sand, trace silt				7.0						
2	16	7	4					6.6						
				Stiff gray clay, trace silt										
3	16	8	6					7.2						
				Stiff gray clay with fine sand										
4	12	4	8					7.3						
5	16	7	10					2,500						
				Gray fine sand, trace small gravel										
6	16	3	15					753						
7	16	12						17						
8	16	12	20					14						
				E.O.B. 20'5"										
			25											
			30											
			35											
			40											
			45											

I hereby certify that the information on this form is true and correct to the best of my knowledge.

Signature: [signature] Firm: Badger State Drilling Co., Inc.

This form is authorized by Chapters 144.147 and 162, Wis. Stats. Completion of this report is mandatory. Penalties: Forfeit not less than $10 nor more than $5000 for each violation. Fined not less than $10 or more than $100 or imprisoned not less than 30 days, or both for each violation. Each day of continued violation is a separate offense, pursuant to ss 144.99 and 162.06, Wis. Stats.

State of Wisconsin
Department of Natural Resources

Route to: Solid Waste ☐ Haz. Waste ☐ Wastewater ☐
Env. Response & Repair ☐ Underground Tanks ☒ Other ☐ _____

MONITORING WELL CONSTRUCTION
Form 4400-113A Rev. 4-90

Facility/Project Name: Star Industries	Local Grid Location of Well: ____ ft. ☐N. ☐S. ____ ft. ☐E. ☐W.	Well Name: MW-4
Facility License, Permit or Monitoring Number: _____	Grid Origin Location: Lat. 801 Janesville Ave. Long. ____ or St. Plane Fort Atkinson, WI ft. N. ____ ft. E.	Wis. Unique Well Number: JS 556 DNR Well Number: ____
Type of Well: Water Table Observation Well ☒ 11; Piezometer ☐ 12	Section Location of Waste/Source: SW 1/4 of SE 1/4 of Sec. 4, T. 5 N, R. 14 ☒E. ☐W.	Date Well Installed: 08/30/99 (mm/dd/yy)
Distance Well Is From Waste/Source Boundary: 20 ft.	Location of Well Relative to Waste/Source: u ☐ Upgradient s ☐ Sidegradient d ☒ Downgradient n ☐ Not Known	Well Installed By: (Person's Name and Firm) Dave Cruise, Badger State Drilling
Is Well A Point of Enforcement Std. Application? ☒ Yes ☐ No		

A. Protective pipe, top elevation Flush ft. MSL

B. Well casing, top elevation 2 ft. MSL

C. Land surface elevation ____ ft. MSL

D. Surface seal, bottom ____ ft. MSL or ____ ft.

E. Bentonite seal, top ____ ft. MSL or 1.5 ft.

F. Fine sand, top ____ ft. MSL or 3.0 ft.

G. Filter pack, top ____ ft. MSL or 4.0 ft.

Screen joint, top ____ ft. MSL or 5.0 ft.

I. Well bottom ____ ft. MSL or 15.0 ft.

J. Filter pack, bottom ____ ft. MSL or 20.5 ft.

K. Borehole, bottom ____ ft. MSL or 20.5 ft.

L. Borehole, diameter 8.0 in.

O.D. well casing 2.375 in.

N. I.D. well casing 2.067 in.

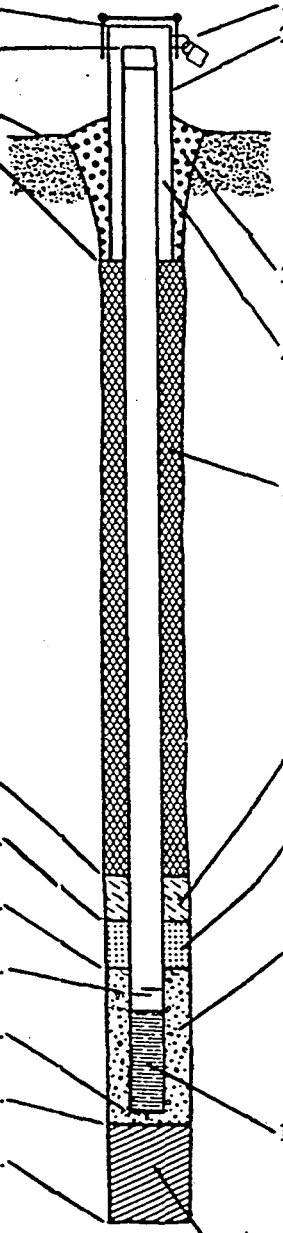

10. USCS classification of soil near screen:
GP ☐ GM ☐ GC ☐ GW ☐ SW ☐ SP ☐
SM ☐ SC ☐ ML ☐ MH ☐ CL ☐ CH ☐
Bedrock ☐

13. Sieve analysis attached? ☐ Yes ☒ No

14. Drilling method used: Rotary ☐ 50; Hollow Stem Auger ☒ 41; Other ☐ ____

15. Drilling fluid used: Water ☐ 02; Air ☐ 01; Drilling Mud ☐ 03; None ☒ 99

16. Drilling additives used? ☐ Yes ☒ No

Describe _____

17. Source of water (attach analysis): _____

1. Cap and lock? ☒ Yes ☐ No

2. Protective cover pipe:
a. Inside diameter: 9.0 in.
b. Length: 10.0 ft.
c. Material: Steel ☒ 04; Other ☐ ____
d. Additional protection? ☐ Yes ☐ No
If yes, describe: _____

3. Surface seal: Bentonite ☐ 30; Concrete ☒ 01; Other ☐ ____

4. Material between well casing and protective pipe: Bentonite ☐ 30; Annular space seal ☐ ____; Other ☒ Filter Sand

5. Annular space seal: a. Granular Bentonite ☒ 33
b. ____ Lbs/gal mud weight . . . Bentonite-sand slurry ☐ 35
c. ____ Lbs/gal mud weight . . . . . Bentonite slurry ☐ 31
d. ____ % Bentonite . . . . . Bentonite-cement grout ☐ 50
e. .45 Ft^3 volume added for any of the above
f. How installed: Tremie ☐ 01; Tremie pumped ☐ 02; Gravity ☒ 08

6. Bentonite seal: a. Bentonite granules ☐ 33
b. ☐1/4 in. ☒3/8 in. ☐1/2 in. Bentonite pellets ☐ 32
c. Bentonite Chips Other ☐ ____

7. Fine sand material: Manufacturer, product name & mesh size
a. 40-60 Ohio
b. Volume added .3 ft^3

8. Filter pack material: Manufacturer, product name and mesh size
a. 1.0-2.0 Ohio
b. Volume added 4.8 ft^3

9. Well casing: Flush threaded PVC schedule 40 ☒ 23; Flush threaded PVC schedule 80 ☐ 24; Other ☐ ____

10. Screen material: Sch. 40 PVC
a. Screen type: Factory cut ☒ 11; Continuous slot ☐ 01; Other ☐ ____
b. Manufacturer Timco
c. Slot size: 0.010 in.
d. Slotted length: 10.0 ft.

11. Backfill material (below filter pack): None ☐ 14; Other ☐ ____

I hereby certify that the information on this form is true and correct to the best of my knowledge.

Signature: [signature] Firm: Badger State Drilling, Inc.

Please complete both sides of this form and return to the appropriate DNR office listed at the top of this form as required by chs. 144, 147 and 160, Wis. Stats., and ch. NR 141, Wis. Ad. Code. In accordance with ch.144, Wis Stats., failure to file this form may result in a forfeiture of not less than $10, nor more than $5,000 for each day of violation. In accordance with ch. 147, Wis. Stats., failure to file this form may result in a forfeiture of not more than $10,000 for each day of violation. NOTE: Shaded areas are for DNR use only. See instructions for more information including where the completed form should be sent.

State of Wisconsin
Department of Natural Resources

MONITORING WELL DEVELOPMENT
Form 4400-113B Rev. 4-90

Route to: Solid Waste ☐ Haz. Waste ☐ Wastewater ☐
Env. Response & Repair ☐ Underground Tanks ☒ Other ☐ _____

Facility/Project Name	County Name	Well Name
J-Star Industries	Jefferson	MW-4

Facility License, Permit or Monitoring Number	County Code	Wis. Unique Well Number	DNR Well Number
_____	27	JS 556	___

1. Can this well be purged dry? ☐ Yes ☒ No

2. Well development method
- surged with bailer and bailed ☐ 41
- surged with bailer and pumped ☒ 61
- surged with block and bailed ☐ 42
- surged with block and pumped ☐ 62
- surged with block, bailed and pumped ☐ 70
- compressed air ☐ 20
- bailed only ☐ 10
- pumped only ☐ 51
- pumped slowly ☐ 50
- Other _____ ☐

3. Time spent developing well 45 min.

4. Depth of well (from top of well casisng) 14.49 ft.

5. Inside diameter of well 2.067 in.

6. Volume of water in filter pack and well casing 60.0 gal.

7. Volume of water removed from well ___.__ gal.

8. Volume of water added (if any) ___.__ gal.

9. Source of water added _____

10. Analysis performed on water added? ☐ Yes ☐ No
(If yes, attach results)

	Before Development	After Development
11. Depth to Water (from top of well casing)	a. 7.38 ft.	7.53 ft.
Date	b. 08 / 31 / 99 (mm dd yy)	08 / 31 / 99 (mm dd yy)
Time	c. 9:30 ☒ a.m. ☐ p.m.	10:45 ☒ a.m. ☐ p.m.
12. Sediment in well bottom	0.0 inches	0.0 inches
13. Water clarity	Clear ☐ 10 Turbid ☒ 15 (Describe) light gray	Clear ☒ 20 Turbid ☐ 25 (Describe)

Fill in if drilling fluids were used and well is at solid waste facility:

14. Total suspended solids	____.__ mg/l	____.__ mg/l
15. COD	____.__ mg/l	____.__ mg/l

16. Additional comments on development:

Well developed by: Person's Name and Firm

Name: Dean Flannery

Firm: Badger State Drilling, Inc.

I hereby certify that the above information is true and correct to the best of my knowledge.

Signature: [signature]

Print Initials: MAG

Firm: Badger State Drilling, Inc.

NOTE: Shaded areas are for DNR use only. See instructions for more information including a list of county codes.

State of Wisconsin
Department of Natural Resources

Route To:
- [ ] Solid Waste
- [ ] Emergency Response
- [ ] Wastewater
- [ ] Haz. Waste
- [X] Underground Tanks
- [ ] Water Resources
- [ ] Other _____

Soil Boring Log Information

Form 4400-122 1-96 DEC

Facility/Project Name: J Star Industries	License/Permit/Monitoring Number:	Boring Number: PZ-1
Boring Drilled By (Firm name and name of crew chief): D. Cruise, Badger State Drilling Co., Inc.	Date Drilling Started: 8 30 99 (MM DD YY)	Date Drilling Completed: 8 30 99 (MM DD YY) / Drilling Method: 4 1/4 HSA
DNR Facility Well No.:	WI Unique Well No.: JS 558 / Common Well Name: PZ-1	Final Static Water Level: 762.36 Feet MSL / Surface Elevation: 798.33 Feet MSL / Borehole Diameter: 8 Inches
Boring Location: State Plane ____ N, ____ E S/C/N; SW 1/4 of SE 1/4 of Section 4, T 5 N, R 14 (E) W	Lat ____ N; Long ____ W	Local Grid Location (If applicable): ____ Feet [ ] N [ ] S; ____ Feet [ ] E [ ] W
County: Jefferson	DNR County Code: 27	Civil Town/ City/ or Village: 801 Janesville Ave. Fort Atkinson, WI

Sample Number	Length Recovered (in.)	Blow Counts	Depth in feet	Soil/Rock Description And Geologic Origin Each Major Unit	USCS	Graphic Log	Well Diagram	PID/FID	Standard Penetration	Moisture Content	Liquid Limit	Plastic Limit	P 200	RQD/ Comments
				1' Black silty topsoil										
			2	Sand and gravel (fill material)										
			4											
1	16	7	6					2500						
2	16	8	8	Stiff gray clay, trace silt, some sand				2000						
3	16	7	10	Stiff gray clay with fine sand, trace silt				300						
			15	Stiff to very stiff gray silt, with fine sand, trace clay										
			20											
			25											
4	16	8	30					146						
5	16	7						70						
6	16	9	35					90						
				E.O.B. 36'										
			40											
			45											

I hereby certify that the information on this form is true and correct to the best of my knowledge.

Signature: [signature] Firm: Badger State Drilling Co., Inc.

This form is authorized by Chapters 144.147 and 162, Wis. Stats. Completion of this report is mandatory. Penalties: Forfeit not less than $10 nor more than $5000 for each violation. Fined not less than $10 or more than $100 or imprisoned not less than 30 days, or both for each violation. Each day of continued violation is a separate offense, pursuant to ss 144.99 and 162.06, Wis. Stats.

State of Wisconsin
Department of Natural Resources

Route to: Solid Waste ☐ Haz. Waste ☐ Wastewater ☐
Env. Response & Repair ☐ Underground Tanks ☒ Other ☐ _____

MONITORING WELL CONSTRUCTION
Form 4400-113A Rev. 4-90

Facility/Project Name: J-Star Industries	Local Grid Location of Well: ____ ft. ☐N. ☐S. ____ ft. ☐E. ☐W.	Well Name: PZ-1
Facility License, Permit or Monitoring Number:	Grid Origin Location: Lat. 801 Janesville Ave. Long. ____ or St. Plane Fort Atkinson, WI ft. N. ____ ft. E.	Wis. Unique Well Number: JS 558 DNR Well Number:
Type of Well: Water Table Observation Well ☐ 11; Piezometer ☒ 12	Section Location of Waste/Source: SW 1/4 of SE 1/4 of Sec. 4, T. 5 N, R. 14 ☒E. ☐W.	Date Well Installed: 08 / 31 / 99 (m m / d d / y y)
Distance Well Is From Waste/Source Boundary: 0 ft.	Location of Well Relative to Waste/Source: u ☐ Upgradient s ☐ Sidegradient d ☐ Downgradient n ☐ Not Known	Well Installed By: (Person's Name and Firm) Dave Cruise; Badger State Drilling
Is Well A Point of Enforcement Std. Application? ☒ Yes ☐ No		

A. Protective pipe, top elevation 20 ft. MSL

B. Well casing, top elevation 22 ft. MSL

Land surface elevation ____ ft. MSL

D. Surface seal, bottom ____ ft. MSL or ____ ft.

12. USCS classification of soil near screen:
GP ☐ GM ☐ GC ☐ GW ☐ SW ☐ SP ☐
SM ☐ SC ☐ ML ☐ MH ☐ CL ☐ CH ☐
Bedrock ☐

13. Sieve analysis attached? ☐ Yes ☒ No

14. Drilling method used: Rotary ☐ 50; Hollow Stem Auger ☒ 41; Other ☐ ____

15. Drilling fluid used: Water ☐ 02; Air ☐ 01; Drilling Mud ☐ 03; None ☒ 99

16. Drilling additives used? ☐ Yes ☒ No

Describe ____

17. Source of water (attach analysis): ____

E. Bentonite seal, top ____ ft. MSL or 21.0 ft.

F. Fine sand, top ____ ft. MSL or 26.6 ft.

G. Filter pack, top ____ ft. MSL or 28.0 ft.

H. Screen joint, top ____ ft. MSL or 30.97 ft.

I. Well bottom ____ ft. MSL or 35.97 ft.

J. Filter pack, bottom ____ ft. MSL or 35.97 ft.

K. Borehole, bottom ____ ft. MSL or 35.97 ft.

L. Borehole, diameter 8.0 in.

M. O.D. well casing 2.375 in.

N. I.D. well casing 2.067 in.

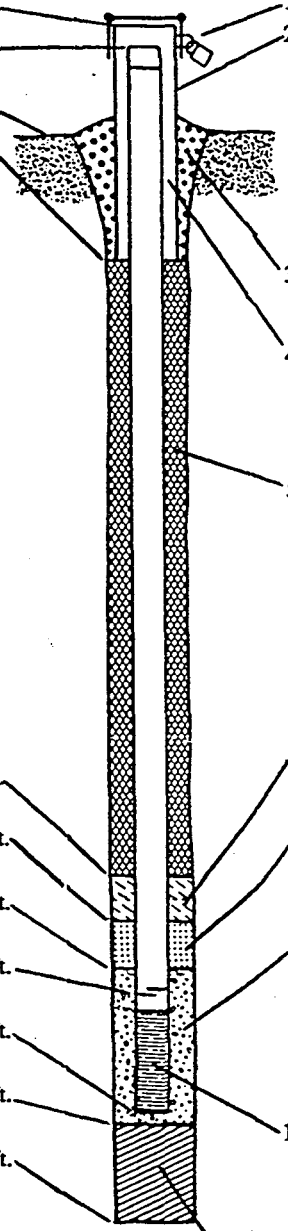

1. Cap and lock? ☒ Yes ☐ No

2. Protective cover pipe:
a. Inside diameter: 4.0 in.
b. Length: 7.0 ft.
c. Material: Steel ☒ 04; Other ☐ ____
d. Additional protection? ☐ Yes ☐ No
If yes, describe: ____

3. Surface seal: Bentonite ☒ 30; Concrete ☐ 01; Other ☐ ____

4. Material between well casing and protective pipe: Bentonite ☐ 30; Annular space seal ☐ ____; Other ☒ Filter Sand

5. Annular space seal: a. Granular Bentonite ☒ 33
b. ____ Lbs/gal mud weight . . . Bentonite-sand slurry ☐ 35
c. ____ Lbs/gal mud weight . . . . . Bentonite slurry ☐ 31
d. ____ % Bentonite . . . . . Bentonite-cement grout ☐ 50
e. 8.0 Ft^3 volume added for any of the above
f. How installed: Tremie ☐ 01; Tremie pumped ☐ 02; Gravity ☒ 08

6. Bentonite seal: a. Bentonite granules ☐ 33
b. ☐1/4 in. ☒3/8 in. ☐1/2 in. Bentonite pellets ☐ 32
c. Bentonite chips Other ☐ ____

7. Fine sand material: Manufacturer, product name & mesh size
a. 40-60 Ohio
b. Volume added .45 ft^3

8. Filter pack material: Manufacturer, product name and mesh size
a. 1.0-2.0 Ohio
b. Volume added 2.41 ft^3

9. Well casing: Flush threaded PVC schedule 40 ☒ 23; Flush threaded PVC schedule 80 ☐ 24; Other ☐ ____

10. Screen material: Sch. 40 PVC
a. Screen type: Factory cut ☒ 11; Continuous slot ☐ 01; Other ☐ ____
b. Manufacturer Timco
c. Slot size: 0.010 in.
d. Slotted length: 5.0 ft.

11. Backfill material (below filter pack): None ☐ 14; Other ☐ ____

I hereby certify that the information on this form is true and correct to the best of my knowledge.

Signature [signature] Firm: Badger State Drilling, Inc.

Please complete both sides of this form and return to the appropriate DNR office listed at the top of this form as required by chs. 144, 147 and 160, Wis. Stats., and ch. NR 141, Wis. Ad. Code. In accordance with ch.144, Wis Stats., failure to file this form may result in a forfeiture of not less than $10, nor more than $5000 for each day of violation. In accordance with ch. 147, Wis. Stats., failure to file this form may result in a forfeiture of not more than $10,000 for each day of violation. NOTE: Shaded areas are for DNR use only. See instructions for more information including where the completed form should be sent.

State of Wisconsin
Department of Natural Resources

MONITORING WELL DEVELOPMENT
Form 4400-113B Rev. 4-90

Route to: Solid Waste ☐ Haz. Waste ☐ Wastewater ☐
Env. Response & Repair ☐ Underground Tanks ☒ Other ☐ _____

Facility/Project Name	County Name	Well Name
J-Star Industries	Jefferson	PZ-1

Facility License, Permit or Monitoring Number	County Code	Wis. Unique Well Number	DNR Well Number
_____	27	JS 558	_____

1. Can this well be purged dry? ☒ Yes ☐ No

2. Well development method

surged with bailer and bailed	☒	41
surged with bailer and pumped	☐	61
surged with block and bailed	☐	42
surged with block and pumped	☐	62
surged with block, bailed and pumped	☐	70
compressed air	☐	20
bailed only	☐	10
pumped only	☐	51
pumped slowly	☐	50
Other _____	☐	

3. Time spent developing well 45 min.

4. Depth of well (from top of well casisng) 35.97 ft.

5. Inside diameter of well 2.067 in.

6. Volume of water in filter pack and well casing ___.__ gal.

7. Volume of water removed from well 8.0 gal.

8. Volume of water added (if any) ___.__ gal.

9. Source of water added _____

10. Analysis performed on water added? ☐ Yes ☐ No
(If yes, attach results)

	Before Development	After Development
11. Depth to Water (from top of well casing)	a. 10.19 ft.	23.66 ft.
Date	b. 08 / 31 / 99 (mm dd yy)	08 / 31 / 99 (mm dd yy)
Time	c. 9:45 ☒ a.m. ☐ p.m.	10:30 ☒ a.m. ☐ p.m.
12. Sediment in well bottom	0.2 inches	0.0 inches
13. Water clarity	Clear ☐ 10 Turbid ☒ 15	Clear ☐ 20 Turbid ☒ 25
(Describe)	light gray	light gray

Fill in if drilling fluids were used and well is at solid waste facility:

14. Total suspended solids	____.__ mg/l	____.__ mg/l
15. COD	____.__ mg/l	____.__ mg/l

16. Additional comments on development:

Bail Dry Twice

Well developed by: Person's Name and Firm

Name: Dave Cruise

Firm: Badger State Drilling, Inc.

I hereby certify that the above information is true and correct to the best of my knowledge.

Signature: [signature]

Print Initials: MAG

Firm: Badger State Drilling, Inc.

NOTE: Shaded areas are for DNR use only. See instructions for more information including a list of county codes.

APPENDIX C

SLUG TEST DATA

J-Star, MW-1 Falling Head Test

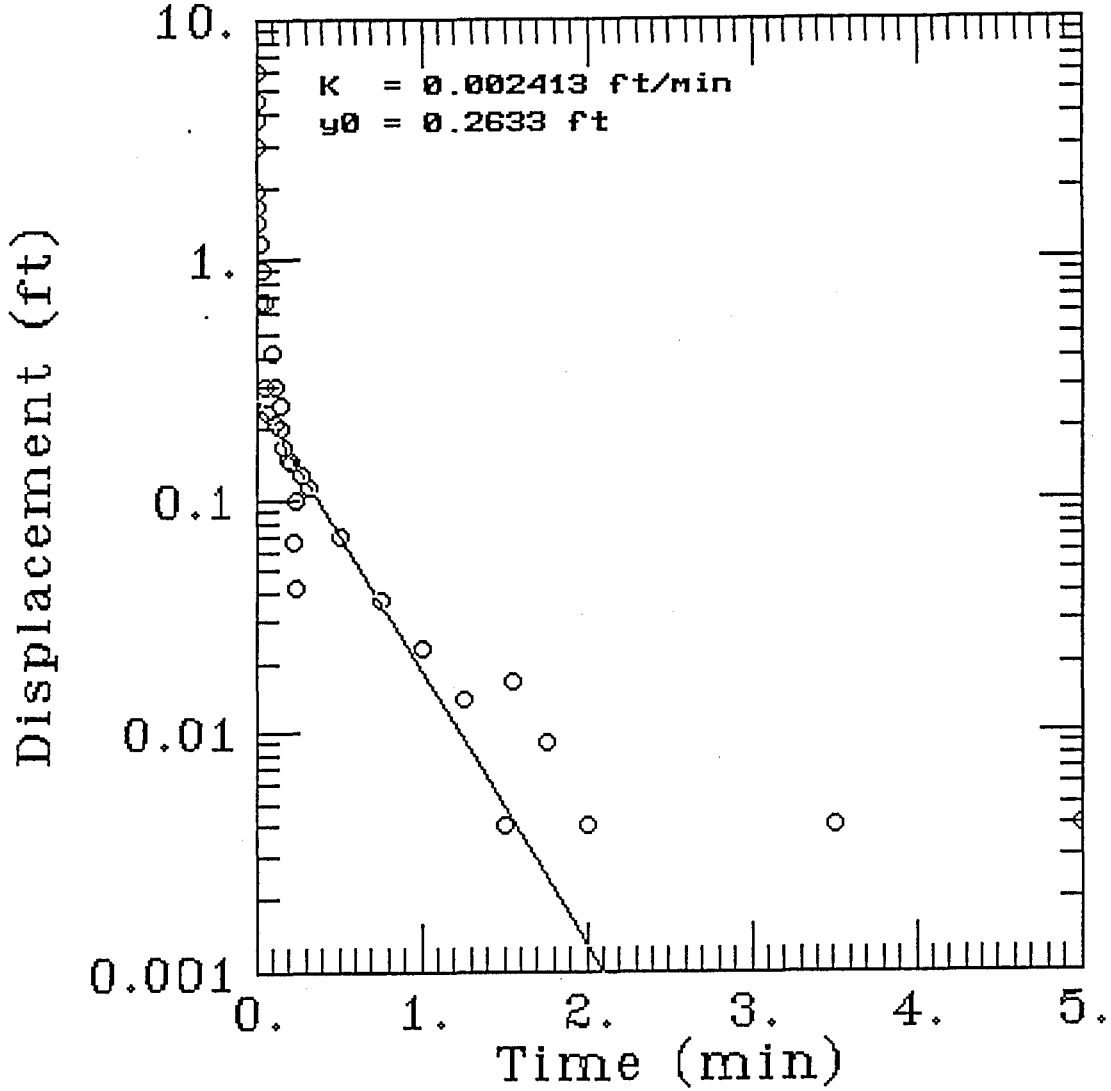

AQTESOLV

GERAGHTY & MILLER, INC.

Modeling Group

10/14/99,
10:59:32

==========
==========

TEST DESCRIPTION

Data set..... mw1.dat
Data set title..... J-Star, MW-1 Falling Head Test
Company..... J-Star Industries
Project..... 1-541-926
Location..... Fort Atkinson
Test date..... 10-5-99
Test well..... NA
Obs. well..... MW-1

Knowns and Constants:
No. of data points..... 35
Radius of well casing..... 0.1667
Radius of well..... 0.6667
Aquifer saturated thickness..... 50
Well screen length..... 7
Static height of water in well..... 7
Log(Re/Rw)..... 1.323
A, B, C..... 1.913, 0.266, 0.000

==========
==========

ANALYTICAL METHOD

Bouwer-Rice (Unconfined Aquifer Slug Test)

==========
==========

RESULTS FROM STATISTICAL CURVE MATCHING

STATISTICAL MATCH PARAMETER ESTIMATES

	Estimate		Std. Error
K =	6.9619E-003	+/-	1.1537E-003
y0 =	2.6328E-001	+/-	4.4299E-002

ANALYSIS OF MODEL RESIDUALS

residual = calculated - observed
weighted residual = residual * weight

Weighted Residual Statistics:

Number of residuals..... 34
Number of estimated parameters.... 2
Degrees of freedom..... 32
Residual mean..... 0.006537
Residual standard deviation..... 0.01328
Residual variance..... 0.0001764

Model Residuals:

Time	Observed	Calculated	Residual	Weight
0.025	0.676	0.2464	0.4296	0.0333
0.241	0.0416	0.13899	-0.097394	0.269
0.05	0.298	0.2306	0.0674	0.0583
0.231	0.0666	0.14273	-0.076128	0.265
0.075	0.236	0.21582	0.020185	0.0833
0.236	0.1	0.14085	-0.040849	0.222

0.1166	0.212	0.19328	0.018716	0.1333
0.194	0.15	0.15743	-0.0074344	0.184
0.1666	0.17	0.16929	0.00070661	0.1833
0.151	0.2	0.17644	0.02356	0.151
0.2166	0.146	0.14828	-0.0022806	0.2333
0.146	0.25	0.17879	0.071206	0.137
0.2666	0.127	0.12988	-0.002876	0.2833
0.123	0.3	0.19003	0.10997	0.118
0.3166	0.113	0.11376	-0.0007557	0.3333
0.104	0.4166	0.19985	0.21675	0.089
0.5	0.07	0.069962	3.849E-005	0.5833
0.061	0.6666	0.22397	0.44263	0.047
0.75	0.037	0.036065	0.0009354	0.8333
0.033	0.9166	0.24123	0.67537	0.033
1	0.023	0.018591	0.004409	1.0833
0.023	1.1666	0.24771	0.91889	0.018
1.25	0.014	0.0095835	0.0044165	1.3333
0.014	1.4166	0.25369	1.1629	0.014
1.5	0.004	0.0049402	-0.00094023	1.5833
0.009	1.6666	0.25707	1.4095	0.009
1.75	0.009	0.0025466	0.0064534	1.8333

```
        0.009          1.9166        0.25707          1.6595
  0.004
            2           0.004      0.0013128       0.0026872
    2.5
        0.004               3         0.2605          2.7395
  0.004
          3.5           0.004    2.4633E-005       0.0039754
      4
        0.004             4.5         0.2605          4.2395
  0.004
            5           0.004    4.6223E-007       0.0039995
    5.5
        0.004               6         0.2605          5.7395
  0.004
```

==========
==========

RESULTS FROM VISUAL CURVE MATCHING

VISUAL MATCH PARAMETER ESTIMATES

```
            Estimate
   K  =   6.9619E-003
   y0 =   2.6328E-001
```

<<

J-Star, MW-2 Falling Head Test

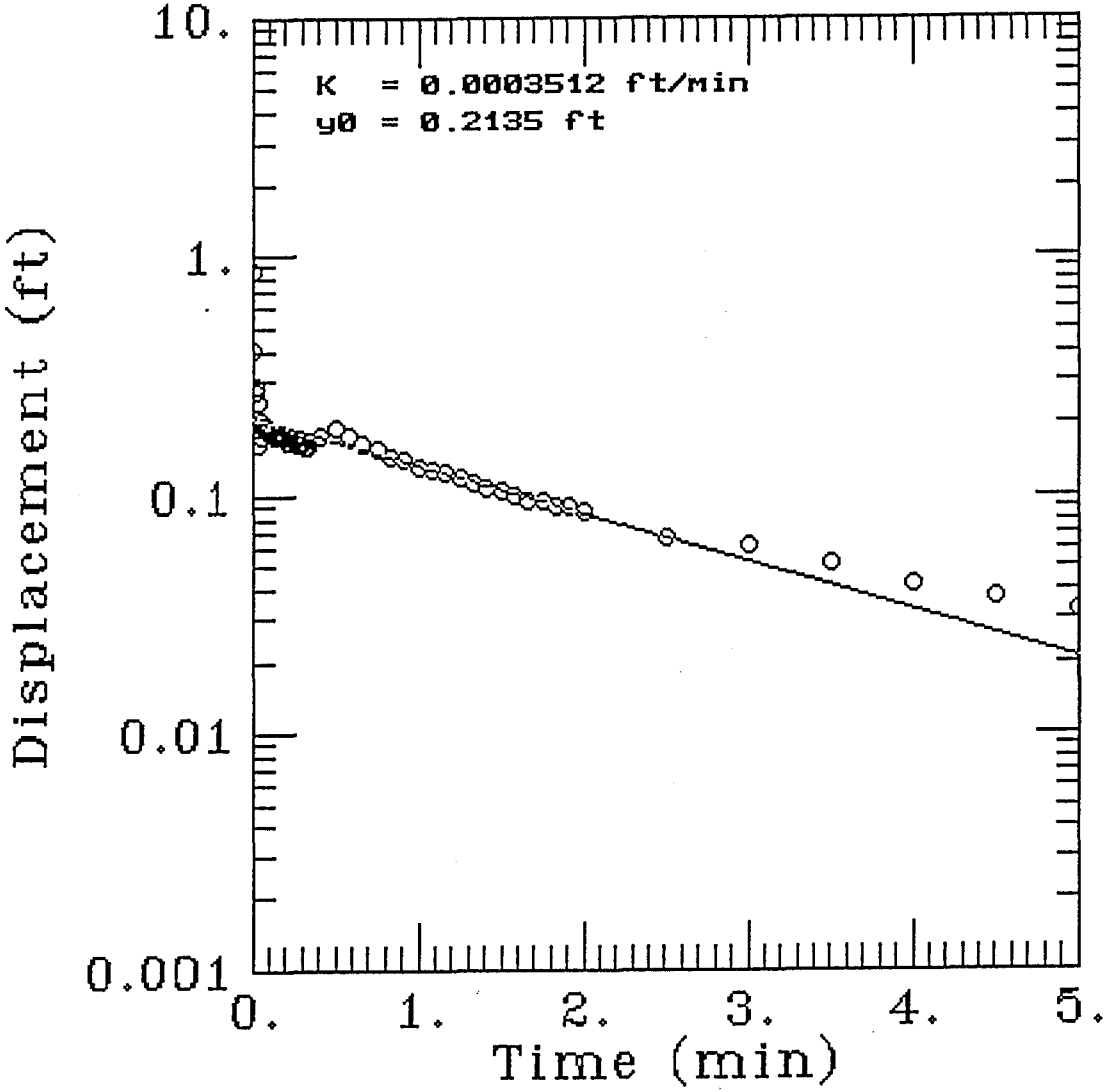

AQTESOLV

GERAGHTY & MILLER, INC.

Modeling Group

10/14/99
16:40:21

==========
==========

TEST DESCRIPTION

Data set..... mw2.dat
Data set title..... J-Star, MW-2 Falling Head Test
Company..... Strand
Project..... 1-541-926
Client..... J-Star
Location..... Fort Atkinson
Test date..... 10-5-99
Test well..... NA
Obs. well..... NA

Knowns and Constants:
No. of data points..... 61
Radius of well casing..... 0.0833
Radius of well..... 0.3333
Aquifer saturated thickness..... 50
Well screen length..... 10
Static height of water in well..... 11
Log(Re/Rw)..... 2.178
A, B, C..... 2.444, 0.397, 0.000

==========
==========

ANALYTICAL METHOD

Bouwer-Rice (Unconfined Aquifer Slug Test)

==========
==========

1			
0.0583	0.208	0.20775	0.00024893
1			
0.0666	0.189	0.20695	-0.017951
1			
0.075	0.194	0.20615	-0.012145
1			
0.0833	0.189	0.20535	-0.016351
1			
0.1	0.189	0.20376	-0.014764
1			
0.1166	0.184	0.2022	-0.018198
1			
0.1333	0.179	0.20064	-0.021635
1			
0.15	0.179	0.19908	-0.020084
1			
0.1666	0.175	0.19755	-0.022554
1			
0.1833	0.175	0.19603	-0.021027
1			
0.2	0.175	0.19451	-0.019512
1			
0.2166	0.17	0.19302	-0.023017
1			
0.2333	0.17	0.19152	-0.021525
1			
0.25	0.17	0.19004	-0.020044
1			
0.2666	0.165	0.18858	-0.023584
1			
0.2833	0.165	0.18713	-0.022126
1			
0.3	0.165	0.18568	-0.02068
1			
0.3166	0.16	0.18425	-0.024253
1			
0.3333	0.16	0.18283	-0.022828
1			
0.4166	0.179	0.17589	0.0031137
1			
0.5	0.189	0.1692	0.0198

APPENDIX D

DATA COLLECTION PROCEDURES AND ANALYTICAL METHODS

APPENDIX D
DATA COLLECTION PROCEDURES AND ANALYTICAL METHODS

D.1 SOIL BORING AND MONITORING WELL INSTALLATION

Soil borings for monitoring wells MW-1 to MW-4 and piezometer PZ-1 were drilled and sampled using a truck-mounted drill rig equipped with 4.25-inch inside diameter hollow stem augers and a 24-inch- long, 2-inch outside diameter split spoon sampler. The split spoon sampler was advanced by conventional methods including the use of a standard 140 pound hammer which was allowed to free fall at 30-inch intervals. The monitoring wells were constructed in accordance with NR 141 using 2-inch diameter PVC materials.

Soil borings were advanced with Geoprobe sampling equipment at 4 locations (SB-1 to SB-4). The Geoprobe rods and soil sampler are approximately 2 inches in diameter. Soil samples were collected using an 18-inch- to 24-inch-long Geoprobe sampler with disposable acetate liners.

D.2 DECONTAMINATION PROCEDURES

Steam cleaned drilling equipment was used for the construction of each boring and monitoring well. Steam cleaning of the augers was performed off site prior to drilling activities. Geoprobe rods and samplers were decontaminated between each boring and each soil or groundwater sample collected using a Liquinox-water wash and tap water rinses. A new, disposable acetate liner was used for each soil sample collected with the Geoprobe equipment. Split spoon samplers were decontaminated between each sample interval using a Liquinox-water wash and tap water rinses.

Teflon bailers, new disposable bailers, or stainless steel pumping equipment were used for well development, and Teflon bailers were used for groundwater sampling from monitoring wells. Sampling and development equipment was decontaminated between each well using a Liquinox-water wash and tap water rinses. New, disposable tubing was used for each groundwater sample collected using the Geoprobe equipment. New, disposable nitrile gloves were used during soil sampling, well development, and groundwater sampling.

D.3 SOIL SAMPLING AND FIELD SCREENING

Generally, split spoon samples were collected at 2.5-foot intervals. Geoprobe soil samples were collected continuously. Field samples were collected into Ziploc bags for soil vapor headspace analysis. Each sample was agitated for about 30 seconds, warmed to approximately 70°F for about 20 minutes and analyzed with a PID. The PID (Microtip model) was equipped with a 10.6

electron volt lamp. The PID was calibrated each day prior to sampling using an isobutylene standard and correcting the span setting to read parts per million total organic vapor as benzene.

Laboratory soil samples were containerized immediately upon collection. GRO, DRO, VOC, and PVOC samples (approximately 25 grams of soil) were collected into 60 ml septum lined lid glass jars. GRO, VOC, and PVOC samples were preserved with 25 ml of methanol.

Soil cuttings were placed in 55-gallon drums and stored on site.

D.4 WELL DEVELOPMENT AND GROUNDWATER SAMPLING

Well development was done in accordance with the Wisconsin Administrative Code, Chapter NR 141. Wells MW-1 through MW-4 and piezometer PZ-1 were developed by bailing, purging, and surged as required by NR 140.

After each well development was complete, a Teflon bailer was used to collect laboratory groundwater samples. VOC, PVOC, and GRO samples were collected into 40 ml VOC vials preserved with 500 µL-50 percent hydrochloric acid (HCl). DRO samples were collected into amber liter jars and preserved with HCl. Lead samples were field filtered and preserved with nitric acid.

A trip blank, field bailer blank, and a duplicate sample were submitted for laboratory analysis.

D.5 SAMPLE ANALYSIS

December 1998 soil samples were analyzed for VOCs (EPA Method 8021); GRO (WI DNR Modified GRO Method); DRO (WI DNR Modified DRO Method), and lead (SW846 Method 6010).

December 1998 groundwater samples were analyzed for VOCs (EPA Method 8021).

August 1999 water samples were analyzed for PVOCs (EPA Method 8020); GRO (WI DNR Modified GRO Method); DRO (WI DNR Modified DRO Method), and lead (SW846 Method 6010).

January 2000 groundwater samples were analyzed for PVOCs (EPA Method 8020).

1998 analyses were conducted at Northern Lake Service, Inc. (Wisconsin Lab Certification ID #721026460). 1999 analyses were conducted at En Chem (Wisconsin Lab Certification ID 405132750). 2000 analyses were conducted at Commonwealth Technology (Wisconsin Lab Certification ID 157066030). Samples were delivered to the laboratories in coolers packed with ice.

Chain of custody procedures were followed for all samples. Sample chain of custody forms are included with the analytical forms in Appendix D.

D.6 SITE SURVEY AND GROUNDWATER ELEVATIONS

Monitoring well elevations were surveyed based on the City of Fort Atkinson benchmark elevation of 809.52 feet AMSL. Monitoring well and boring location were measured with a tape measure to nearby structures. The depth to groundwater for each well was determined by using an electric tape and meter accurate to 0.01-feet.

APPENDIX E

SOIL AND GROUNDWATER ANALYTICAL REPORTS

2319

Strand Associates, Inc

910 W. Wingra Drive
Madison, WI 53715
(608) 251-4843

Laboratory Results Report

Saturday, February 13, 1999

Mr. Mark Butorac
J-Star Manufacturing
801 Janesville Avenue
Fort Atkinson, WI 53538

Purchase Order or Job No.: 1-541-926

Samples Received On: 12/21/1998 at 1700
Samples received on ice? Yes

Sample No.	7207	Trip Blank	Sample Taken:	From 12/16/1998 to	Ending at:	1030	(Grab)

Sub Contract see NLS

Sample No.	7208	SB-1 10'-11.5'	Sample Taken:	From 12/21/1998 to	Ending at:	1010	(Grab)

Sub Contract see NLS

Sample No.	7209	SB-2 2'-4'	Sample Taken:	From 12/21/1998 to	Ending at:	1505	(Grab)

Sub Contract see NLS

Sample No.	7210	SB-3 10'-13'	Sample Taken:	From 12/21/1998 to	Ending at:	1410	(Grab)

Sub Contract see NLS

Sample No.	7211	SB-4 0'-2'	Sample Taken:	From 12/21/1998 to	Ending at:	1200	(Grab)

Sub Contract see NLS

Sample No.	7212	SB-1 16'-17'	Sample Taken:	From 12/21/1998 to	Ending at:	1018	(Grab)

Sub Contract see NLS

STRAND
ASSOCIATES, INC

Comments:

None.

Troy Larson 2/13/99

Authorized for Release Date

CC:

Attachments: COC, NLS Results

STRAND ASSOCIATES, INC

NORTHERN LAKE SERVICE, INC.
Analytical Laboratory and Environmental Services
400 North Lake Avenue - Crandon, WI 54520
Tel:(715)478-2777 Fax:(715)478-3060

WIS. LAB CERT. NO. 721026460

ANALYTICAL REPORT

NLS PROJECT# 45670
NLS CUST# 32825

Client: Strand Associates, Inc.
Attn: Steve Small
910 W. Wingra Drive
Madison, WI 53715

Project Description: J-Star
Project Title: 1-541-926

Sample ID: MeOH Blank NLS#: 189428
Ref. Line 1 of COC 100702 Description: MeOH Blank
Collected: 12/21/98 Received: 12/23/98 Reported: 01/11/99

Parameter	Result	Units	LOD	LOQ	Method	Analyzed	Lab
VOCs (soils) by EPA 8021	see attached				EPA 8021	12/29/98	721026460

Sample ID: Soil, SB-1 10-11.5 NLS#: 189429
Ref. Line 2 of COC 100702 Description: Soil, SB-1 10-11.5
Collected: 12/21/98 Received: 12/23/98 Reported: 01/11/99

Parameter	Result	Units	LOD	LOQ	Method	Analyzed	Lab
Lead, tot. as Pb	ND	mg/Kg DWB	3.8	13	SW846 6010	01/08/99	721026460
Solids, total on solids	91.0	%	0.10		ASTM D2216	12/28/98	721026460
Metals digestion - total (soil/sludge) ICP	yes				SW846 3050	12/31/98	721026460
VOCs (soils) by EPA 8021	see attached				SW846 8021	12/29/98	721026460
GRO (soil)	930	mg/Kg DWB	45	160	WI MOD GRO	12/31/98	721026460
	Additional Comments: spike-96%, duplicate-94%, surrogate-96% Peaks present before the GRO quantitation window.						
DRO (solid)	120	mg/Kg DWB	2.7	9.4	WI MOD DRO	12/30/98	721026460
	Additional Comments: spike-95%, duplicate-100%, surrogate-66% Peaks present before the DRO quantitation window.						
Organics Extraction (DRO)	yes				WI MOD DRO	12/24/98	721026460

NORTHERN LAKE SERVICE, INC.
Analytical Laboratory and Environmental Services
400 North Lake Avenue - Crandon, WI 54520
Tel:(715)478-2777 Fax:(715)478-3060

WIS. LAB CERT. NO. 721026460

ANALYTICAL REPORT

NLS PROJECT# 45670
NLS CUST# 32825

Client: Strand Associates, Inc.
Attn: Steve Small
910 W. Wingra Drive
Madison, WI 53715

Project Description: J-Star
Project Title: 1-541-926

Sample ID: Soil, SB-2 2-4 NLS#: 189430
Ref. Line 3 of COC 100702 Description: Soil, SB-2 2-4
Collected: 12/21/98 Received: 12/23/98 Reported: 01/11/99

Parameter	Result	Units	LOD	LOQ	Method	Analyzed	Lab
Lead, tot. as Pb	ND	mg/Kg DWB	3.8	13	SW846 6010	01/08/99	721026460
Solids, total on solids	87.3	%	0.10		ASTM D2216	12/28/98	721026460
Metals digestion - total (soil/sludge) ICP	yes				SW846 3050	12/31/98	721026460
VOCs (soils) by EPA 8021	see attached				SW846 8021	12/30/98	721026460
	Additional Comments: Unidentified hydrocarbons present.						
GRO (soil)	8.8	mg/Kg DWB	0.91	3.1	WI MOD GRO	01/04/99	721026460
	Additional Comments: spike-90%, duplicate-98%, surrogate-106%						
DRO (solid)	< 76 >	mg/Kg DWB	27	94	WI MOD DRO	12/30/98	721026460
	Additional Comments: spike-95%, duplicate-100%, surrogate-n/a Peaks present after the DRO quantitation window. Surrogate not quantifiable due to sample dilution.						
Organics Extraction (DRO)	yes				WI MOD DRO	12/24/98	721026460

NORTHERN LAKE SERVICE, INC.
Analytical Laboratory and Environmental Services
400 North Lake Avenue - Crandon, WI 54520
Tel:(715)478-2777 Fax:(715)478-3060

WIS. LAB CERT. NO. 721026460

ANALYTICAL REPORT

NLS PROJECT# 45670
NLS CUST# 32825

Client: Strand Associates, Inc.
Attn: Steve Small
910 W. Wingra Drive
Madison, WI 53715

Project Description: J-Star
Project Title: 1-541-926

Sample ID: Soil, SB-3 10-13 NLS#: 189431
Ref. Line 4 of COC 100702 Description: Soil, SB-3 10-13
Collected: 12/21/98 Received: 12/23/98 Reported: 01/11/99

Parameter	Result	Units	LOD	LOQ	Method	Analyzed	Lab
Lead, tot. as Pb	ND	mg/Kg DWB	4.1	14	SW846 6010	01/08/99	721026460
Solids, total on solids	84.4	%	0.10		ASTM D2216	12/28/98	721026460
Metals digestion - total (soil/sludge) ICP	yes				SW846 3050	12/31/98	721026460
VOCs (soils) by EPA 8021	see attached				SW846 8021	12/29/98	721026460
GRO (soil)	ND	mg/Kg DWB	0.91	3.1	WI MOD GRO	12/31/98	721026460
	Additional Comments: spike-91%, duplicate-103%, surrogate-88%						
DRO (solid)	ND	mg/Kg DWB	2.7	9.4	WI MOD DRO	01/06/99	721026460
	Additional Comments: spike-95%, duplicate-100%, surrogate-77%						
Organics Extraction (DRO)	yes				WI MOD DRO	12/24/98	721026460

NORTHERN LAKE SERVICE, INC.
Analytical Laboratory and Environmental Services
400 North Lake Avenue - Crandon, WI 54520
Tel:(715)478-2777 Fax:(715)478-3060

WIS. LAB CERT. NO. 721026460

ANALYTICAL REPORT

NLS PROJECT# 45670
NLS CUST# 32825

Client: Strand Associates, Inc.
Attn: Steve Small
910 W. Wingra Drive
Madison, WI 53715

Project Description: J-Star
Project Title: 1-541-926

Sample ID: Soil, SB-4 0-2 NLS#: 189432
Ref. Line 5 of COC 100702 Description: Soil, SB-4 0-2
Collected: 12/21/98 Received: 12/23/98 Reported: 01/11/99

Parameter	Result	Units	LOD	LOQ	Method	Analyzed	Lab
Lead, tot. as Pb	ND	mg/Kg DWB	4.7	17	SW846 6010	01/08/99	721026460
Solids, total on solids	79.4	%	0.10		ASTM D2216	12/28/98	721026460
Metals digestion - total (soil/sludge) ICP	yes				SW846 3050	12/31/98	721026460
VOCs (soils) by EPA 8021	see attached				SW846 8021	12/29/98	721026460
GRO (soil)	ND	mg/Kg DWB	0.91	3.1	WI MOD GRO	12/31/98	721026460
Additional Comments: spike-91%, duplicate-103%, surrogate-86%							
DRO (solid)	ND	mg/Kg DWB	2.7	9.4	WI MOD DRO	12/30/98	721026460
Additional Comments: spike-95%, duplicate-100%, surrogate-113%							
Organics Extraction (DRO)	yes				WI MOD DRO	12/24/98	721026460

NORTHERN LAKE SERVICE, INC.
Analytical Laboratory and Environmental Services
400 North Lake Avenue - Crandon, WI 54520
Tel:(715)478-2777 Fax:(715)478-3060

WIS. LAB CERT. NO. 721026460

ANALYTICAL REPORT

NLS PROJECT# 45670
NLS CUST# 32825

Client: Strand Associates, Inc.
Attn: Steve Small
910 W. Wingra Drive
Madison, WI 53715

Project Description: J-Star
Project Title: 1-541-926

Sample ID: Soil, SB-1 16-17 NLS#: 189433
Ref. Line 6 of COC 100702 Description: Soil, SB-1 16-17
Collected: 12/21/98 Received: 12/23/98 Reported: 01/11/99

Parameter	Result	Units	LOD	LOQ	Method	Analyzed	Lab
Lead, tot. as Pb	ND	mg/Kg DWB	3.9	14	SW846 6010	01/08/99	721026460
Solids, total on solids	83.8	%	0.10		ASTM D2216	12/28/98	721026460
Metals digestion - total (soil/sludge) ICP	yes				SW846 3050	12/31/98	721026460
VOCs (soils) by EPA 8021	see attached				SW846 8021	12/29/98	721026460
	Additional Comments: Unidentified hydrocarbons present.						
GRO (soil)	54	mg/Kg DWB	1.8	6.3	WI MOD GRO	01/04/99	721026460
	Additional Comments: spike-82%, duplicate-87%, surrogate-114%						
DRO (solid)	ND	mg/Kg DWB	2.7	9.4	WI MOD DRO	12/30/98	721026460
	Additional Comments: spike-95%, duplicate-100%, surrogate-112%						
Organics Extraction (DRO)	yes				WI MOD DRO	12/24/98	721026460

NORTHERN LAKE SERVICE, INC.
Analytical Laboratory and Environmental Services
400 North Lake Avenue - Crandon, WI 54520
Tel:(715)478-2777 Fax:(715)478-3060

WIS. LAB CERT. NO. 721026460

ANALYTICAL REPORT

NLS PROJECT# 45670
NLS CUST# 32825

Client: Strand Associates, Inc.
Attn: Steve Small
910 W. Wingra Drive
Madison, WI 53715

Project Description: J-Star
Project Title: 1-541-926

Sample ID: Trip Blank NLS#: 189434
Ref. Line 1 of COC 100701 Description: Trip Blank
Collected: 12/21/98 Received: 12/23/98 Reported: 01/11/99

Parameter	Result	Units	LOD	LOQ	Method	Analyzed	Lab
VOCs (water) by EPA 8021	see attached				SW846 8021	12/30/98	721026460

Sample ID: SB-1 NLS#: 189436
Ref. Line 2 of COC 100701 Description: SB-1
Collected: 12/21/98 Received: 12/23/98 Reported: 01/11/99

Parameter	Result	Units	LOD	LOQ	Method	Analyzed	Lab
VOCs (water) by EPA 8021	see attached Additional Comments: Sample pH was > 2.0.				SW846 8021	12/30/98	721026460

Sample ID: SB-2 NLS#: 189437
Ref. Line 3 of COC 100701 Description: SB-2
Collected: 12/21/98 Received: 12/23/98 Reported: 01/11/99

Parameter	Result	Units	LOD	LOQ	Method	Analyzed	Lab
VOCs (water) by EPA 8021	see attached Additional Comments: Sample pH was > 2.0.				SW846 8021	12/30/98	721026460

NORTHERN LAKE SERVICE, INC.
Analytical Laboratory and Environmental Services
400 North Lake Avenue - Crandon, WI 54520
Tel:(715)478-2777 Fax:(715)478-3060

WIS. LAB CERT. NO. 721026460

ANALYTICAL REPORT

NLS PROJECT# 45670
NLS CUST# 32825

Client: Strand Associates, Inc.
Attn: Steve Small
910 W. Wingra Drive
Madison, WI 53715

Project Description: J-Star
Project Title: 1-541-926

Sample ID: SB-3 NLS#: 189438
Ref. Line 4 of COC 100701 Description: SB-3
Collected: 12/21/98 Received: 12/23/98 Reported: 01/11/99

Parameter	Result	Units	LOD	LOQ	Method	Analyzed	Lab
VOCs (water) by EPA 8021	see attached Additional Comments: Sample pH was > 2.0.				SW846 8021	12/30/98	721026460

Sample ID: SB-4 NLS#: 189439
Ref. Line 5 of COC 100701 Description: SB-4
Collected: 12/21/98 Received: 12/23/98 Reported: 01/11/99

Parameter	Result	Units	LOD	LOQ	Method	Analyzed	Lab
VOCs (water) by EPA 8021	see attached Additional Comments: Sample pH was > 2.0.				SW846 8021	12/30/98	721026460

NORTHERN LAKE SERVICE, INC.
Analytical Laboratory and Environmental Services
400 North Lake Avenue - Crandon, WI 54520
Tel:(715)478-2777 Fax:(715)478-3060

WIS. LAB CERT. NO. 721026460

ANALYTICAL REPORT

NLS PROJECT# 45670
NLS CUST# 32825

Client: Strand Associates, Inc.
Attn: Steve Small
910 W. Wingra Drive
Madison, WI 53715

Project Description: J-Star
Project Title: 1-541-926

Sample ID: Drum "Sludge" NLS#: 189440
Ref. Line 6 of COC 100701 Description: Drum "Sludge"
Collected: 12/21/98 Received: 12/23/98 Reported: 01/11/99

Parameter	Result	Units	LOD	LOQ	Method	Analyzed	Lab
VOCs (water) by EPA 8021	see attached Additional Comments: Free product present in sample. Unidentified hydrocarbons present.				SW846 8021	12/31/98	721026460

Sample ID: Drum "Water" NLS#: 189441
Ref. Line 7 of COC 100701 Description: Drum "Water"
Collected: 12/21/98 Received: 12/23/98 Reported: 01/11/99

Parameter	Result	Units	LOD	LOQ	Method	Analyzed	Lab
VOCs (water) by EPA 8021	see attached Additional Comments: Unidentified hydrocarbons present.				SW846 8021	12/31/98	721026460

NORTHERN LAKE SERVICE, INC.
Analytical Laboratory and Environmental Services
400 North Lake Avenue - Crandon, WI 54520
Tel:(715)478-2777 Fax:(715)478-3060

WIS. LAB CERT. NO. 721026460

ANALYTICAL REPORT

NLS PROJECT# 45670
NLS CUST# 32825

Client: Strand Associates, Inc.
Attn: Steve Small
910 W. Wingra Drive
Madison, WI 53715

Project Description: J-Star
Project Title: 1-541-926

Sample ID: Tubing Blank NLS#: 189442
Ref. Line 8 of COC 100701 Description: Tubing Blank
Collected: 12/21/98 Received: 12/23/98 Reported: 01/11/99

Parameter	Result	Units	LOD	LOQ	Method	Analyzed	Lab
VOCs (water) by EPA 8021	see attached				SW846 8021	12/30/98	721026460

Values in brackets represent results greater than the LOD but less than the LOQ and are within a region of "Less-Certain Quantitation". Results greater than the LOQ are considered to be in the region of "Certain Quantitation".

LOD = Limit of Detection
DWB = Dry Weight Basis
LOQ = Limit of Quantitation
NA = Not Applicable
ND = Not Detected
%DWB = (mg/kg DWB)/10000

Jerry R Bock
Reviewed by:

Authorized by:
R. T. Krueger
Laboratory Manager

ANALYTICAL RESULTS: VOC 8021 List by EPA 8260 - Water - (Saturn 2000)

Customer: Strand Associates, Inc.
Project Description: J-Star Project Title: 1-541-926
Northern Lake Service Project Number: 45670

Analyte Name	189440 Drum "Sludge" ug/L	DILUTION FACTOR	LOD ug/L	LOQ ug/L
Benzene	ND	2	0.23	0.73
Bromobenzene	ND	2	0.32	1.1
Bromochloromethane	ND	2	0.40	1.4
Bromodichloromethane	ND	2	0.22	0.70
Bromoform	ND	2	0.20	0.64
Bromomethane	ND	2	0.39	1.3
n-Butylbenzene	< 0.70 >	2	0.50	1.6
sec-Butylbenzene	ND	2	0.23	0.78
tert-Butylbenzene	ND	2	0.26	0.90
Carbon Tetrachloride	ND	2	0.36	1.2
Chlorobenzene	ND	2	0.20	0.63
Chloroethane	ND	2	5.1	18
Chloroform	ND	2	0.44	1.5
Chloromethane	ND	2	0.37	1.3
2-Chlorotoluene	ND	2	0.26	0.91
4-Chlorotoluene	ND	2	0.24	0.82
Dibromochloromethane	ND	2	0.58	2.0
1,2-Dibromo-3-Chloropropane	ND	2	0.38	1.3
1,2-Dibromoethane	ND	2	0.28	0.95
Dibromomethane	ND	2	0.33	1.2
1,2-Dichlorobenzene	ND	2	0.26	0.91
1,3-Dichlorobenzene	ND	2	0.25	0.85
1,4-Dichlorobenzene	ND	2	0.20	0.65
Dichlorodifluoromethane	ND	2	0.50	1.7
1,1-Dichloroethane	ND	2	0.25	0.82
1,2-Dichloroethane	ND	2	0.31	1.1
1,1-Dichloroethene	ND	2	0.34	1.1
cis-1,2-Dichloroethene	ND	2	0.67	2.3
trans-1,2-Dichloroethene	ND	2	0.59	2.0
1,2-Dichloropropane	ND	2	0.23	0.72
1,3-Dichloropropane	ND	2	0.21	0.66
2,2-Dichloropropane	ND	2	0.51	1.8
1,1-Dichloropropene	ND	2	0.31	1.1
cis-1,3-Dichloropropene	ND	2	0.21	0.65
trans-1,3-Dichloropropene	ND	2	0.27	0.93
Ethylbenzene	1.4	2	0.21	0.70
Hexachlorobutadiene	ND	2	0.43	1.5
Isopropylbenzene	ND	2	0.21	0.71
p-Isopropyltoluene	< 0.21 >	2	0.21	0.66
Methylene chloride	23	2	0.32	1.1
Naphthalene	< 0.84 >	2	0.47	1.6
n-Propylbenzene	ND	2	0.26	0.88
ortho-Xylene	6.0	2	0.23	0.73
Styrene	ND	2	0.30	1.0
1,1,1,2-Tetrachloroethane	ND	2	0.26	0.89
1,1,2,2-Tetrachloroethane	ND	2	0.42	1.4
Tetrachloroethene	ND	2	0.26	0.90
Toluene	1.8	2	0.25	0.86
1,2,3-Trichlorobenzene	ND	2	0.61	2.0
1,2,4-Trichlorobenzene	ND	2	0.30	0.97
1,1,1-Trichloroethane	ND	2	0.36	1.2
1,1,2-Trichloroethane	ND	2	0.37	1.3
Trichloroethene	ND	2	0.21	0.74
Trichlorofluoromethane	ND	2	0.57	2.0
1,2,3-Trichloropropane	ND	2	0.51	1.8

ANALYTICAL RESULTS: VOC 8021 List by EPA 8260 - Water - (Saturn 2000)

Customer: Strand Associates, Inc.
Project Description: J-Star Project Title: 1-541-926
Northern Lake Service Project Number: 45670

Analyte Name	189440 Drum "Sludge" ug/L	DILUTION FACTOR	LOD ug/L	LOQ ug/L
1,2,4-Trimethylbenzene	3.1	2	0.23	0.78
1,3,5-Trimethylbenzene	2.4	2	0.21	0.71
Vinyl chloride	ND	2	0.37	1.3
meta,para-Xylene	7.3	2	1.2	4.1
MTBE	< 0.54 >	2	0.32	1.1

Surrogate Recovery on Dibromofluoromethane = 122 %
Surrogate Recovery on Toluene-d8 = 122 %
Surrogate Recovery on 1-Bromo-4-Fluorobenzene = 122 %

ANALYTICAL RESULTS: VOC 8021 List by EPA 8260 - Water - (Saturn 2000)

Customer: Strand Associates, Inc.
Project Description: J-Star Project Title: 1-541-926
Northern Lake Service Project Number: 45670

Analyte Name	189441 Drum "Water" ug/L	DILUTION FACTOR	LOD ug/L	LOQ ug/L
Benzene	< 18 >	100	12	36
Bromobenzene	ND	100	16	55
Bromochloromethane	ND	100	20	69
Bromodichloromethane	ND	100	11	35
Bromoform	ND	100	10	32
Bromomethane	ND	100	20	65
n-Butylbenzene	210	100	25	79
sec-Butylbenzene	280	100	11	39
tert-Butylbenzene	ND	100	13	45
Carbon Tetrachloride	ND	100	18	62
Chlorobenzene	ND	100	9.9	31
Chloroethane	ND	100	260	880
Chloroform	ND	100	22	76
Chloromethane	ND	100	18	63
2-Chlorotoluene	ND	100	13	46
4-Chlorotoluene	ND	100	12	41
Dibromochloromethane	ND	100	29	100
1,2-Dibromo-3-Chloropropane	ND	100	19	66
1,2-Dibromoethane	ND	100	14	47
Dibromomethane	ND	100	17	58
1,2-Dichlorobenzene	ND	100	13	46
1,3-Dichlorobenzene	ND	100	12	43
1,4-Dichlorobenzene	ND	100	10	32
Dichlorodifluoromethane	ND	100	25	86
1,1-Dichloroethane	ND	100	12	41
1,2-Dichloroethane	ND	100	15	53
1,1-Dichloroethene	ND	100	17	57
cis-1,2-Dichloroethene	ND	100	34	120
trans-1,2-Dichloroethene	ND	100	30	100
1,2-Dichloropropane	ND	100	11	36
1,3-Dichloropropane	ND	100	10	33
2,2-Dichloropropane	ND	100	25	88
1,1-Dichloropropene	ND	100	15	53
cis-1,3-Dichloropropene	ND	100	10	33
trans-1,3-Dichloropropene	ND	100	14	47
Ethylbenzene	460	100	10	35
Hexachlorobutadiene	ND	100	22	74
Isopropylbenzene	240	100	10	36
p-Isopropyltoluene	230	100	10	33
Methylene chloride	ND	100	16	55
Naphthalene	500	100	23	80
n-Propylbenzene	330	100	13	44
ortho-Xylene	1400	100	12	36
Styrene	ND	100	15	51
1,1,1,2-Tetrachloroethane	ND	100	13	45
1,1,2,2-Tetrachloroethane	220	100	21	72
Tetrachloroethene	ND	100	13	45
Toluene	210	100	12	43
1,2,3-Trichlorobenzene	ND	100	31	98
1,2,4-Trichlorobenzene	ND	100	15	48
1,1,1-Trichloroethane	ND	100	18	62
1,1,2-Trichloroethane	ND	100	18	63
Trichloroethene	ND	100	11	37
Trichlorofluoromethane	ND	100	29	99
1,2,3-Trichloropropane	ND	100	26	88

ANALYTICAL RESULTS: VOC 8021 List by EPA 8260 - Water - (Saturn 2000)

Customer: Strand Associates, Inc.
Project Description: J-Star Project Title: 1-541-926
Northern Lake Service Project Number: 45670

Analyte Name	189441 Drum "Water" ug/L	DILUTION FACTOR	LOD ug/L	LOQ ug/L
1,2,4-Trimethylbenzene	2000	100	11	39
1,3,5-Trimethylbenzene	620	100	10	36
Vinyl chloride	ND	100	18	63
meta,para-Xylene	2200	100	60	210
MTBE	ND	100	16	55

Surrogate Recovery on Dibromofluoromethane = 118 %
Surrogate Recovery on Toluene-d8 = 108 %
Surrogate Recovery on 1-Bromo-4-Fluorobenzene = 114 %

ANALYTICAL RESULTS: VOC 8021 List by EPA 8260 (Saturn 2)

Customer: Strand Associates, Inc.
Project Description: J-Star Project Title: 1-541-926
Northern Lake Service Project Number: 45670

Analyte Name	189434 Trip Blank ug/L	DILUTION FACTOR	LOD ug/L	LOQ ug/L
Benzene	ND	1	0.071	0.25
Bromobenzene	ND	1	0.091	0.31
Bromochloromethane	ND	1	0.091	0.32
Bromodichloromethane	ND	1	0.081	0.28
Bromoform	ND	1	0.089	0.30
Bromomethane	ND	1	0.088	0.29
n-Butylbenzene	ND	1	0.064	0.22
sec-Butylbenzene	ND	1	0.063	0.22
tert-Butylbenzene	ND	1	0.055	0.19
Carbon Tetrachloride	ND	1	0.089	0.31
Chlorobenzene	ND	1	0.066	0.23
Chloroethane	ND	1	0.36	1.3
Chloroform	ND	1	0.090	0.31
Chloromethane	ND	1	0.099	0.34
2-Chlorotoluene	ND	1	0.066	0.23
4-Chlorotoluene	ND	1	0.078	0.27
Dibromochloromethane	ND	1	0.11	0.39
1,2-Dibromo-3-Chloropropane	ND	1	0.35	1.3
1,2-Dibromoethane	ND	1	0.084	0.29
Dibromomethane	ND	1	0.085	0.33
1,2-Dichlorobenzene	ND	1	0.080	0.28
1,3-Dichlorobenzene	ND	1	0.079	0.27
1,4-Dichlorobenzene	ND	1	0.091	0.31
Dichlorodifluoromethane	ND	1	0.12	0.41
1,1-Dichloroethane	ND	1	0.077	0.27
1,2-Dichloroethane	ND	1	0.095	0.33
1,1-Dichloroethene	ND	1	0.093	0.32
cis-1,2-Dichloroethene	ND	1	0.098	0.34
trans-1,2-Dichloroethene	ND	1	0.070	0.24
1,2-Dichloropropane	ND	1	0.096	0.33
1,3-Dichloropropane	ND	1	0.080	0.28
2,2-Dichloropropane	ND	1	0.14	0.47
1,1-Dichloropropene	ND	1	0.099	0.34
cis-1,3-Dichloropropene	ND	1	0.082	0.28
trans-1,3-Dichloropropene	ND	1	0.058	0.20
Ethylbenzene	ND	1	0.066	0.22
Hexachlorobutadiene	ND	1	0.12	0.42
Isopropylbenzene	ND	1	0.059	0.20
p-Isopropyltoluene	ND	1	0.080	0.28
Methylene chloride	ND	1	0.13	0.46
Naphthalene	ND	1	0.39	1.4
n-Propylbenzene	ND	1	0.052	0.18
ortho-Xylene	ND	1	0.056	0.19
Styrene	ND	1	0.069	0.24
1,1,1,2-Tetrachloroethane	ND	1	0.11	0.38
1,1,2,2-Tetrachloroethane	ND	1	0.16	0.56
Tetrachloroethene	ND	1	0.066	0.23
Toluene	ND	1	0.12	0.42
1,2,3-Trichlorobenzene	ND	1	0.19	0.67
1,2,4-Trichlorobenzene	ND	1	0.12	0.41
1,1,1-Trichloroethane	ND	1	0.11	0.39
1,1,2-Trichloroethane	ND	1	0.098	0.34
Trichloroethene	ND	1	0.099	0.34
Trichlorofluoromethane	ND	1	0.085	0.29
1,2,3-Trichloropropane	ND	1	0.099	0.38

ANALYTICAL RESULTS: VOC 8021 List by EPA 8260 (Saturn 2)

Customer: Strand Associates, Inc.
Project Description: J-Star Project Title: 1-541-926
Northern Lake Service Project Number: 45670

Analyte Name	189434 Trip Blank ug/L	DILUTION FACTOR	LOD ug/L	LOQ ug/L
1,2,4-Trimethylbenzene	ND	1	0.074	0.26
1,3,5-Trimethylbenzene	ND	1	0.059	0.20
Vinyl chloride	ND	1	0.063	0.22
meta,para-Xylene	ND	1	0.11	0.43
MTBE	ND	1	0.086	0.30

Surrogate Recovery on Dibromofluoromethane = 116 %
Surrogate Recovery on Toluene-d8 = 114 %
Surrogate Recovery on 1-Bromo-4-Fluorobenzene = 109 %

ANALYTICAL RESULTS: VOC 8021 List by EPA 8260 (Saturn 2)

Customer: Strand Associates, Inc.
Project Description: J-Star Project Title: 1-541-926
Northern Lake Service Project Number: 45670

Analyte Name	189436 SB-1 ug/L	DILUTION FACTOR	LOD ug/L	LOQ ug/L
Benzene	2000	100	7.1	25
Bromobenzene	ND	100	9.1	31
Bromochloromethane	ND	100	9.1	32
Bromodichloromethane	ND	100	8.1	28
Bromoform	ND	100	8.9	30
Bromomethane	ND	100	8.8	29
n-Butylbenzene	43	100	6.4	22
sec-Butylbenzene	240	100	6.3	22
tert-Butylbenzene	< 9.2 >	100	5.5	19
Carbon Tetrachloride	ND	100	8.9	31
Chlorobenzene	ND	100	6.6	23
Chloroethane	ND	100	36	130
Chloroform	ND	100	9.0	31
Chloromethane	ND	100	9.9	34
2-Chlorotoluene	ND	100	6.6	23
4-Chlorotoluene	ND	100	7.8	27
Dibromochloromethane	ND	100	11	39
1,2-Dibromo-3-Chloropropane	ND	100	35	130
1,2-Dibromoethane	ND	100	8.4	29
Dibromomethane	ND	100	8.5	33
1,2-Dichlorobenzene	ND	100	8.0	28
1,3-Dichlorobenzene	ND	100	7.9	27
1,4-Dichlorobenzene	ND	100	9.1	31
Dichlorodifluoromethane	ND	100	12	41
1,1-Dichloroethane	ND	100	7.7	27
1,2-Dichloroethane	ND	100	9.5	33
1,1-Dichloroethene	ND	100	9.3	32
cis-1,2-Dichloroethene	ND	100	9.8	34
trans-1,2-Dichloroethene	ND	100	7.0	24
1,2-Dichloropropane	ND	100	9.6	33
1,3-Dichloropropane	ND	100	8.0	28
2,2-Dichloropropane	ND	100	14	47
1,1-Dichloropropene	ND	100	9.9	34
cis-1,3-Dichloropropene	ND	100	8.2	28
trans-1,3-Dichloropropene	ND	100	5.8	20
Ethylbenzene	140	100	6.6	22
Hexachlorobutadiene	ND	100	12	42
Isopropylbenzene	< 11 >	100	5.9	20
p-Isopropyltoluene	ND	100	8.0	28
Methylene chloride	ND	100	13	46
Naphthalene	ND	100	39	140
n-Propylbenzene	48	100	5.2	18
ortho-Xylene	190	100	5.6	19
Styrene	ND	100	6.9	24
1,1,1,2-Tetrachloroethane	ND	100	11	38
1,1,2,2-Tetrachloroethane	ND	100	16	56
Tetrachloroethene	ND	100	6.6	23
Toluene	1200	100	12	42
1,2,3-Trichlorobenzene	ND	100	19	67
1,2,4-Trichlorobenzene	ND	100	12	41
1,1,1-Trichloroethane	ND	100	11	39
1,1,2-Trichloroethane	ND	100	9.8	34
Trichloroethene	ND	100	9.9	34
Trichlorofluoromethane	ND	100	8.5	29
1,2,3-Trichloropropane	ND	100	9.9	38

ANALYTICAL RESULTS: VOC 8021 List by EPA 8260 (Saturn 2)

Customer: Strand Associates, Inc.
Project Description: J-Star Project Title: 1-541-926
Northern Lake Service Project Number: 45670

Analyte Name	189436 SB-1 ug/L	DILUTION FACTOR	LOD ug/L	LOQ ug/L
1,2,4-Trimethylbenzene	27	100	7.4	26
1,3,5-Trimethylbenzene	84	100	5.9	20
Vinyl chloride	ND	100	6.3	22
meta,para-Xylene	440	100	11	43
MTBE	ND	100	8.6	30

Surrogate Recovery on Dibromofluoromethane = 114 %
Surrogate Recovery on Toluene-d8 = 108 %
Surrogate Recovery on 1-Bromo-4-Fluorobenzene = 105 %

ANALYTICAL RESULTS: VOC 8021 List by EPA 8260 (Saturn 2)

Customer: Strand Associates, Inc.
Project Description: J-Star Project Title: 1-541-926
Northern Lake Service Project Number: 45670

Analyte Name	189437 SB-2 ug/L	DILUTION FACTOR	LOD ug/L	LOQ ug/L
Benzene	0.34	1	0.071	0.25
Bromobenzene	ND	1	0.091	0.31
Bromochloromethane	ND	1	0.091	0.32
Bromodichloromethane	ND	1	0.081	0.28
Bromoform	ND	1	0.089	0.30
Bromomethane	ND	1	0.088	0.29
n-Butylbenzene	ND	1	0.064	0.22
sec-Butylbenzene	ND	1	0.063	0.22
tert-Butylbenzene	ND	1	0.055	0.19
Carbon Tetrachloride	ND	1	0.089	0.31
Chlorobenzene	ND	1	0.066	0.23
Chloroethane	ND	1	0.36	1.3
Chloroform	ND	1	0.090	0.31
Chloromethane	ND	1	0.099	0.34
2-Chlorotoluene	ND	1	0.066	0.23
4-Chlorotoluene	ND	1	0.078	0.27
Dibromochloromethane	ND	1	0.11	0.39
1,2-Dibromo-3-Chloropropane	ND	1	0.35	1.3
1,2-Dibromoethane	ND	1	0.084	0.29
Dibromomethane	ND	1	0.085	0.33
1,2-Dichlorobenzene	ND	1	0.080	0.28
1,3-Dichlorobenzene	ND	1	0.079	0.27
1,4-Dichlorobenzene	ND	1	0.091	0.31
Dichlorodifluoromethane	ND	1	0.12	0.41
1,1-Dichloroethane	ND	1	0.077	0.27
1,2-Dichloroethane	ND	1	0.095	0.33
1,1-Dichloroethene	ND	1	0.093	0.32
cis-1,2-Dichloroethene	ND	1	0.098	0.34
trans-1,2-Dichloroethene	ND	1	0.070	0.24
1,2-Dichloropropane	ND	1	0.096	0.33
1,3-Dichloropropane	ND	1	0.080	0.28
2,2-Dichloropropane	ND	1	0.14	0.47
1,1-Dichloropropene	ND	1	0.099	0.34
cis-1,3-Dichloropropene	ND	1	0.082	0.28
trans-1,3-Dichloropropene	ND	1	0.058	0.20
Ethylbenzene	0.94	1	0.066	0.22
Hexachlorobutadiene	ND	1	0.12	0.42
Isopropylbenzene	ND	1	0.059	0.20
p-Isopropyltoluene	ND	1	0.080	0.28
Methylene chloride	ND	1	0.13	0.46
Naphthalene	ND	1	0.39	1.4
n-Propylbenzene	ND	1	0.052	0.18
ortho-Xylene	< 0.11 >	1	0.056	0.19
Styrene	ND	1	0.069	0.24
1,1,1,2-Tetrachloroethane	ND	1	0.11	0.38
1,1,2,2-Tetrachloroethane	ND	1	0.16	0.56
Tetrachloroethene	ND	1	0.066	0.23
Toluene	0.49	1	0.12	0.42
1,2,3-Trichlorobenzene	ND	1	0.19	0.67
1,2,4-Trichlorobenzene	ND	1	0.12	0.41
1,1,1-Trichloroethane	ND	1	0.11	0.39
1,1,2-Trichloroethane	ND	1	0.098	0.34
Trichloroethene	ND	1	0.099	0.34
Trichlorofluoromethane	ND	1	0.085	0.29
1,2,3-Trichloropropane	ND	1	0.099	0.38

ANALYTICAL RESULTS: VOC 8021 List by EPA 8260 (Saturn 2)

Customer: Strand Associates, Inc.
Project Description: J-Star Project Title: 1-541-926
Northern Lake Service Project Number: 45670

Analyte Name	189437 SB-2 ug/L	DILUTION FACTOR	LOD ug/L	LOQ ug/L
1,2,4-Trimethylbenzene	< 0.091 >	1	0.074	0.26
1,3,5-Trimethylbenzene	ND	1	0.059	0.20
Vinyl chloride	ND	1	0.063	0.22
meta,para-Xylene	< 0.22 >	1	0.11	0.43
MTBE	ND	1	0.086	0.30

Surrogate Recovery on Dibromofluoromethane = 98.0 %
Surrogate Recovery on Toluene-d8 = 97.0 %
Surrogate Recovery on 1-Bromo-4-Fluorobenzene = 96.0 %

ANALYTICAL RESULTS: VOC 8021 List by EPA 8260 (Saturn 2)

Customer: Strand Associates, Inc.
Project Description: J-Star Project Title: 1-541-926
Northern Lake Service Project Number: 45670

Analyte Name	189438 SB-3 ug/L	DILUTION FACTOR	LOD ug/L	LOQ ug/L
Benzene	0.54	1	0.071	0.25
Bromobenzene	ND	1	0.091	0.31
Bromochloromethane	ND	1	0.091	0.32
Bromodichloromethane	< 0.10 >	1	0.081	0.28
Bromoform	< 0.18 >	1	0.089	0.30
Bromomethane	ND	1	0.088	0.29
n-Butylbenzene	ND	1	0.064	0.22
sec-Butylbenzene	ND	1	0.063	0.22
tert-Butylbenzene	ND	1	0.055	0.19
Carbon Tetrachloride	ND	1	0.089	0.31
Chlorobenzene	ND	1	0.066	0.23
Chloroethane	ND	1	0.36	1.3
Chloroform	ND	1	0.090	0.31
Chloromethane	ND	1	0.099	0.34
2-Chlorotoluene	ND	1	0.066	0.23
4-Chlorotoluene	ND	1	0.078	0.27
Dibromochloromethane	< 0.18 >	1	0.11	0.39
1,2-Dibromo-3-Chloropropane	ND	1	0.35	1.3
1,2-Dibromoethane	ND	1	0.084	0.29
Dibromomethane	ND	1	0.085	0.33
1,2-Dichlorobenzene	ND	1	0.080	0.28
1,3-Dichlorobenzene	ND	1	0.079	0.27
1,4-Dichlorobenzene	ND	1	0.091	0.31
Dichlorodifluoromethane	ND	1	0.12	0.41
1,1-Dichloroethane	ND	1	0.077	0.27
1,2-Dichloroethane	ND	1	0.095	0.33
1,1-Dichloroethene	ND	1	0.093	0.32
cis-1,2-Dichloroethene	ND	1	0.098	0.34
trans-1,2-Dichloroethene	ND	1	0.070	0.24
1,2-Dichloropropane	ND	1	0.096	0.33
1,3-Dichloropropane	ND	1	0.080	0.28
2,2-Dichloropropane	ND	1	0.14	0.47
1,1-Dichloropropene	ND	1	0.099	0.34
cis-1,3-Dichloropropene	ND	1	0.082	0.28
trans-1,3-Dichloropropene	ND	1	0.058	0.20
Ethylbenzene	0.33	1	0.066	0.22
Hexachlorobutadiene	ND	1	0.12	0.42
Isopropylbenzene	ND	1	0.059	0.20
p-Isopropyltoluene	ND	1	0.080	0.28
Methylene chloride	ND	1	0.13	0.46
Naphthalene	< 0.44 >	1	0.39	1.4
n-Propylbenzene	ND	1	0.052	0.18
ortho-Xylene	0.52	1	0.056	0.19
Styrene	ND	1	0.069	0.24
1,1,1,2-Tetrachloroethane	ND	1	0.11	0.38
1,1,2,2-Tetrachloroethane	ND	1	0.16	0.56
Tetrachloroethene	ND	1	0.066	0.23
Toluene	2.0	1	0.12	0.42
1,2,3-Trichlorobenzene	ND	1	0.19	0.67
1,2,4-Trichlorobenzene	ND	1	0.12	0.41
1,1,1-Trichloroethane	ND	1	0.11	0.39
1,1,2-Trichloroethane	ND	1	0.098	0.34
Trichloroethene	ND	1	0.099	0.34
Trichlorofluoromethane	ND	1	0.085	0.29
1,2,3-Trichloropropane	ND	1	0.099	0.38

ANALYTICAL RESULTS: VOC 8021 List by EPA 8260 (Saturn 2)

Customer: Strand Associates, Inc.
Project Description: J-Star Project Title: 1-541-926
Northern Lake Service Project Number: 45670

Analyte Name	189438 SB-3 ug/L	DILUTION FACTOR	LOD ug/L	LOQ ug/L
1,2,4-Trimethylbenzene	0.53	1	0.074	0.26
1,3,5-Trimethylbenzene	< 0.12 >	1	0.059	0.20
Vinyl chloride	ND	1	0.063	0.22
meta,para-Xylene	1.2	1	0.11	0.43
MTBE	ND	1	0.086	0.30

Surrogate Recovery on Dibromofluoromethane = 103 %
Surrogate Recovery on Toluene-d8 = 97.0 %
Surrogate Recovery on 1-Bromo-4-Fluorobenzene = 96.0 %

ANALYTICAL RESULTS: VOC 8021 List by EPA 8260 (Saturn 2)

Customer: Strand Associates, Inc.
Project Description: J-Star Project Title: 1-541-926
Northern Lake Service Project Number: 45670

Analyte Name	189439 SB-4 ug/L	DILUTION FACTOR	LOD ug/L	LOQ ug/L
Benzene	0.78	1	0.071	0.25
Bromobenzene	ND	1	0.091	0.31
Bromochloromethane	ND	1	0.091	0.32
Bromodichloromethane	ND	1	0.081	0.28
Bromoform	ND	1	0.089	0.30
Bromomethane	ND	1	0.088	0.29
n-Butylbenzene	ND	1	0.064	0.22
sec-Butylbenzene	ND	1	0.063	0.22
tert-Butylbenzene	ND	1	0.055	0.19
Carbon Tetrachloride	ND	1	0.089	0.31
Chlorobenzene	ND	1	0.066	0.23
Chloroethane	ND	1	0.36	1.3
Chloroform	ND	1	0.090	0.31
Chloromethane	ND	1	0.099	0.34
2-Chlorotoluene	ND	1	0.066	0.23
4-Chlorotoluene	ND	1	0.078	0.27
Dibromochloromethane	ND	1	0.11	0.39
1,2-Dibromo-3-Chloropropane	ND	1	0.35	1.3
1,2-Dibromoethane	ND	1	0.084	0.29
Dibromomethane	ND	1	0.085	0.33
1,2-Dichlorobenzene	ND	1	0.080	0.28
1,3-Dichlorobenzene	ND	1	0.079	0.27
1,4-Dichlorobenzene	ND	1	0.091	0.31
Dichlorodifluoromethane	ND	1	0.12	0.41
1,1-Dichloroethane	ND	1	0.077	0.27
1,2-Dichloroethane	ND	1	0.095	0.33
1,1-Dichloroethene	ND	1	0.093	0.32
cis-1,2-Dichloroethene	ND	1	0.098	0.34
trans-1,2-Dichloroethene	ND	1	0.070	0.24
1,2-Dichloropropane	ND	1	0.096	0.33
1,3-Dichloropropane	ND	1	0.080	0.28
2,2-Dichloropropane	ND	1	0.14	0.47
1,1-Dichloropropene	ND	1	0.099	0.34
cis-1,3-Dichloropropene	ND	1	0.082	0.28
trans-1,3-Dichloropropene	ND	1	0.058	0.20
Ethylbenzene	0.26	1	0.066	0.22
Hexachlorobutadiene	ND	1	0.12	0.42
Isopropylbenzene	ND	1	0.059	0.20
p-Isopropyltoluene	ND	1	0.080	0.28
Methylene chloride	ND	1	0.13	0.46
Naphthalene	ND	1	0.39	1.4
n-Propylbenzene	ND	1	0.052	0.18
ortho-Xylene	0.40	1	0.056	0.19
Styrene	ND	1	0.069	0.24
1,1,1,2-Tetrachloroethane	ND	1	0.11	0.38
1,1,2,2-Tetrachloroethane	ND	1	0.16	0.56
Tetrachloroethene	ND	1	0.066	0.23
Toluene	2.2	1	0.12	0.42
1,2,3-Trichlorobenzene	ND	1	0.19	0.67
1,2,4-Trichlorobenzene	ND	1	0.12	0.41
1,1,1-Trichloroethane	ND	1	0.11	0.39
1,1,2-Trichloroethane	ND	1	0.098	0.34
Trichloroethene	ND	1	0.099	0.34
Trichlorofluoromethane	ND	1	0.085	0.29
1,2,3-Trichloropropane	ND	1	0.099	0.38

ANALYTICAL RESULTS: VOC 8021 List by EPA 8260 (Saturn 2)

Customer: Strand Associates, Inc.
Project Description: J-Star Project Title: 1-541-926
Northern Lake Service Project Number: 45670

Analyte Name	189439 SB-4 ug/L	DILUTION FACTOR	LOD ug/L	LOQ ug/L
1,2,4-Trimethylbenzene	0.29	1	0.074	0.26
1,3,5-Trimethylbenzene	< 0.062 >	1	0.059	0.20
Vinyl chloride	ND	1	0.063	0.22
meta,para-Xylene	0.95	1	0.11	0.43
MTBE	ND	1	0.086	0.30

Surrogate Recovery on Dibromofluoromethane = 113 %
Surrogate Recovery on Toluene-d8 = 106 %
Surrogate Recovery on 1-Bromo-4-Fluorobenzene = 103 %

ANALYTICAL RESULTS: VOC 8021 List by EPA 8260 (Saturn 2)

Customer: Strand Associates, Inc.
Project Description: J-Star Project Title: 1-541-926
Northern Lake Service Project Number: 45670

Analyte Name	189442 Tubing Blank ug/L	DILUTION FACTOR	LOD ug/L	LOQ ug/L
Benzene	0.36	1	0.071	0.25
Bromobenzene	ND	1	0.091	0.31
Bromochloromethane	ND	1	0.091	0.32
Bromodichloromethane	ND	1	0.081	0.28
Bromoform	ND	1	0.089	0.30
Bromomethane	ND	1	0.088	0.29
n-Butylbenzene	ND	1	0.064	0.22
sec-Butylbenzene	ND	1	0.063	0.22
tert-Butylbenzene	ND	1	0.055	0.19
Carbon Tetrachloride	ND	1	0.089	0.31
Chlorobenzene	ND	1	0.066	0.23
Chloroethane	ND	1	0.36	1.3
Chloroform	ND	1	0.090	0.31
Chloromethane	ND	1	0.099	0.34
2-Chlorotoluene	ND	1	0.066	0.23
4-Chlorotoluene	ND	1	0.078	0.27
Dibromochloromethane	ND	1	0.11	0.39
1,2-Dibromo-3-Chloropropane	ND	1	0.35	1.3
1,2-Dibromoethane	ND	1	0.084	0.29
Dibromomethane	ND	1	0.085	0.33
1,2-Dichlorobenzene	ND	1	0.080	0.28
1,3-Dichlorobenzene	ND	1	0.079	0.27
1,4-Dichlorobenzene	ND	1	0.091	0.31
Dichlorodifluoromethane	ND	1	0.12	0.41
1,1-Dichloroethane	ND	1	0.077	0.27
1,2-Dichloroethane	ND	1	0.095	0.33
1,1-Dichloroethene	ND	1	0.093	0.32
cis-1,2-Dichloroethene	ND	1	0.098	0.34
trans-1,2-Dichloroethene	ND	1	0.070	0.24
1,2-Dichloropropane	ND	1	0.096	0.33
1,3-Dichloropropane	ND	1	0.080	0.28
2,2-Dichloropropane	ND	1	0.14	0.47
1,1-Dichloropropene	ND	1	0.099	0.34
cis-1,3-Dichloropropene	ND	1	0.082	0.28
trans-1,3-Dichloropropene	ND	1	0.058	0.20
Ethylbenzene	0.29	1	0.066	0.22
Hexachlorobutadiene	ND	1	0.12	0.42
Isopropylbenzene	ND	1	0.059	0.20
p-Isopropyltoluene	ND	1	0.080	0.28
Methylene chloride	0.96	1	0.13	0.46
Naphthalene	2.0	1	0.39	1.4
n-Propylbenzene	ND	1	0.052	0.18
ortho-Xylene	0.26	1	0.056	0.19
Styrene	ND	1	0.069	0.24
1,1,1,2-Tetrachloroethane	ND	1	0.11	0.38
1,1,2,2-Tetrachloroethane	ND	1	0.16	0.56
Tetrachloroethene	ND	1	0.066	0.23
Toluene	2.8	1	0.12	0.42
1,2,3-Trichlorobenzene	ND	1	0.19	0.67
1,2,4-Trichlorobenzene	ND	1	0.12	0.41
1,1,1-Trichloroethane	ND	1	0.11	0.39
1,1,2-Trichloroethane	ND	1	0.098	0.34
Trichloroethene	1.2	1	0.099	0.34
Trichlorofluoromethane	ND	1	0.085	0.29
1,2,3-Trichloropropane	ND	1	0.099	0.38

ANALYTICAL RESULTS: VOC 8021 List by EPA 8260 (Saturn 2)

Customer: Strand Associates, Inc.
Project Description: J-Star Project Title: 1-541-926
Northern Lake Service Project Number: 45670

Analyte Name	189442 Tubing Blank ug/L	DILUTION FACTOR	LOD ug/L	LOQ ug/L
1,2,4-Trimethylbenzene	< 0.19 >	1	0.074	0.26
1,3,5-Trimethylbenzene	ND	1	0.059	0.20
Vinyl chloride	ND	1	0.063	0.22
meta,para-Xylene	0.97	1	0.11	0.43
MTBE	ND	1	0.086	0.30

Surrogate Recovery on Dibromofluoromethane = 109 %
Surrogate Recovery on Toluene-d8 = 106 %
Surrogate Recovery on 1-Bromo-4-Fluorobenzene = 103 %

ANALYTICAL RESULTS: VOC's by EPA 8021 - Methanol Extract (CXB)

Customer: Strand Associates, Inc.
Project Description: J-Star Project Title: 1-541-926
Northern Lake Service Project Number: 45670

Analyte Name	189428 MeOH Blank ug/kg	DILUTION FACTOR	LOD ug/kg	LOQ ug/kg
Benzene	ND	1	6.0	19
Bromobenzene	ND	1	16	51
Bromochloromethane	ND	1	6.0	20
Bromodichloromethane	ND	1	6.6	22
Bromoform	ND	1	15	53
Bromomethane	ND	1	6.8	24
n-Butylbenzene	ND	1	11	38
sec-Butylbenzene	ND	1	14	46
tert-Butylbenzene	ND	1	15	46
Carbon Tetrachloride	ND	1	5.2	16
Chlorobenzene	ND	1	5.6	18
Chloroethane	ND	1	6.2	20
Chloroform	ND	1	7.0	23
Chloromethane	ND	1	7.1	25
2-Chlorotoluene	ND	1	14	45
4-Chlorotoluene	ND	1	14	44
Dibromochloromethane	ND	1	6.2	21
1,2-Dibromo-3-Chloropropane	ND	1	6.4	20
1,2-Dibromoethane	ND	1	6.9	22
Dibromomethane	ND	1	5.4	18
1,2-Dichlorobenzene	ND	1	14	44
1,3-Dichlorobenzene	ND	1	14	44
1,4-Dichlorobenzene	ND	1	14	45
Dichlorodifluoromethane	ND	1	7.7	27
1,1-Dichloroethane	ND	1	7.1	24
1,2-Dichloroethane	ND	1	7.4	25
1,1-Dichloroethene	ND	1	17	55
cis-1,2-Dichloroethene	ND	1	12	39
trans-1,2-Dichloroethene	ND	1	8.6	32
1,2-Dichloropropane	ND	1	7.0	23
1,3-Dichloropropane	ND	1	10	35
2,2-Dichloropropane	ND	1	9.2	30
1,1-Dichloropropene	ND	1	14	45
cis-1,3-Dichloropropene	ND	1	15	47
trans-1,3-Dichloropropene	ND	1	12	43
Ethylbenzene	ND	1	5.4	17
Hexachlorobutadiene	ND	1	14	47
Isopropylbenzene	ND	1	14	45
p-Isopropyltoluene	ND	1	14	44
Methylene chloride	ND	1	5.6	18
Naphthalene	45	1	12	43
n-Propylbenzene	ND	1	14	46
ortho-Xylene/Styrene	ND	1	30	94
1,1,1,2-Tetrachloroethane	ND	1	7.6	25
1,1,2,2-Tetrachloroethane	ND	1	12	43
Tetrachloroethene	ND	1	13	41
Toluene	ND	1	14	16
1,2,3-Trichlorobenzene	ND	1	18	59
1,2,4-Trichlorobenzene	ND	1	11	39
1,1,1-Trichloroethane	ND	1	7.2	24
1,1,2-Trichloroethane	ND	1	14	50
Trichloroethene	ND	1	9.4	31
Trichlorofluoromethane	ND	1	5.6	18
1,2,3-Trichloropropane	ND	1	5.0	16
1,2,4-Trimethylbenzene	ND	1	14	44

ANALYTICAL RESULTS: VOC's by EPA 8021 - Methanol Extract (CXB)

Customer: Strand Associates, Inc.
Project Description: J-Star Project Title: 1-541-926
Northern Lake Service Project Number: 45670

Analyte Name	189428 MeOH Blank ug/kg	DILUTION FACTOR	LOD ug/kg	LOQ ug/kg
1,3,5-Trimethylbenzene	ND	1	14	45
Vinyl chloride	ND	1	5.0	17
meta,para-Xylene	ND	1	29	93
MTBE	ND	1	8.6	32
Isopropylether	ND	1	10	34

Surrogate Recovery on 2-Bromochlorobenzene (PID) = 101 %
Surrogate Recovery on 2-Bromochlorobenzene (HECD) = 105 %

ANALYTICAL RESULTS: VOC's by EPA 8021 - Methanol Extract (CXB)

Customer: Strand Associates, Inc.
Project Description: J-Star Project Title: 1-541-926
Northern Lake Service Project Number: 45670

Analyte Name	189429 Soil, SB-1 10-11.5 ug/kg	DILUTION FACTOR	LOD ug/kg	LOQ ug/kg
Benzene	4500	100	600	1900
Bromobenzene	ND	100	1600	5100
Bromochloromethane	ND	100	600	2000
Bromodichloromethane	ND	100	660	2200
Bromoform	ND	100	1500	5300
Bromomethane	ND	100	680	2400
n-Butylbenzene	11000	100	1100	3800
sec-Butylbenzene	ND	100	1400	4600
tert-Butylbenzene	ND	100	1500	4600
Carbon Tetrachloride	ND	100	520	1600
Chlorobenzene	ND	100	560	1800
Chloroethane	ND	100	620	2000
Chloroform	ND	100	700	2300
Chloromethane	ND	100	710	2500
2-Chlorotoluene	ND	100	1400	4500
4-Chlorotoluene	ND	100	1400	4400
Dibromochloromethane	ND	100	620	2100
1,2-Dibromo-3-Chloropropane	ND	100	640	2000
1,2-Dibromoethane	ND	100	690	2200
Dibromomethane	ND	100	540	1800
1,2-Dichlorobenzene	ND	100	1400	4400
1,3-Dichlorobenzene	ND	100	1400	4400
1,4-Dichlorobenzene	ND	100	1400	4500
Dichlorodifluoromethane	ND	100	770	2700
1,1-Dichloroethane	ND	100	710	2400
1,2-Dichloroethane	ND	100	740	2500
1,1-Dichloroethene	ND	100	1700	5500
cis-1,2-Dichloroethene	ND	100	1200	3900
trans-1,2-Dichloroethene	ND	100	860	3200
1,2-Dichloropropane	ND	100	700	2300
1,3-Dichloropropane	ND	100	1000	3500
2,2-Dichloropropane	ND	100	920	3000
1,1-Dichloropropene	ND	100	1400	4500
cis-1,3-Dichloropropene	ND	100	1500	4700
trans-1,3-Dichloropropene	ND	100	1200	4300
Ethylbenzene	12000	100	540	1700
Hexachlorobutadiene	ND	100	1400	4700
Isopropylbenzene	< 1800 >	100	1400	4500
p-Isopropyltoluene	ND	100	1400	4400
Methylene chloride	ND	100	560	1800
Naphthalene	5300	100	1200	4300
n-Propylbenzene	5200	100	1400	4600
ortho-Xylene/Styrene	14000	100	3000	9400
1,1,1,2-Tetrachloroethane	ND	100	760	2500
1,1,2,2-Tetrachloroethane	ND	100	1200	4300
Tetrachloroethene	ND	100	1300	4100
Toluene	40000	100	1400	1600
1,2,3-Trichlorobenzene	ND	100	1800	5900
1,2,4-Trichlorobenzene	ND	100	1100	3900
1,1,1-Trichloroethane	ND	100	720	2400
1,1,2-Trichloroethane	ND	100	1400	5000
Trichloroethene	ND	100	940	3100
Trichlorofluoromethane	ND	100	560	1800
1,2,3-Trichloropropane	ND	100	500	1600
1,2,4-Trimethylbenzene	27000	100	1400	4400

ANALYTICAL RESULTS: VOC's by EPA 8021 - Methanol Extract (CXB)

Customer: Strand Associates, Inc.
Project Description: J-Star Project Title: 1-541-926
Northern Lake Service Project Number: 45670

Analyte Name	189429 Soil, SB-1 10-11.5 ug/kg	DILUTION FACTOR	LOD ug/kg	LOQ ug/kg
1,3,5-Trimethylbenzene	10000	100	1400	4500
Vinyl chloride	ND	100	500	1700
meta,para-Xylene	46000	100	2900	9300
MTBE	3600	100	860	3200
Isopropylether	< 2000 >	100	1000	3400

Surrogate Recovery on 2-Bromochlorobenzene (PID) = 92.0 %
Surrogate Recovery on 2-Bromochlorobenzene (HECD) = 104 %

ANALYTICAL RESULTS: VOC's by EPA 8021 - Methanol Extract (CXB)

Customer: Strand Associates, Inc.
Project Description: J-Star Project Title: 1-541-926
Northern Lake Service Project Number: 45670

Analyte Name	189430 Soil, SB-2 2-4 ug/kg	DILUTION FACTOR	LOD ug/kg	LOQ ug/kg
Benzene	21	1	6.0	19
Bromobenzene	ND	1	16	51
Bromochloromethane	ND	1	6.0	20
Bromodichloromethane	ND	1	6.6	22
Bromoform	ND	1	15	53
Bromomethane	ND	1	6.8	24
n-Butylbenzene	< 36 >	1	11	38
sec-Butylbenzene	ND	1	14	46
tert-Butylbenzene	ND	1	15	46
Carbon Tetrachloride	ND	1	5.2	16
Chlorobenzene	ND	1	5.6	18
Chloroethane	ND	1	6.2	20
Chloroform	ND	1	7.0	23
Chloromethane	ND	1	7.1	25
2-Chlorotoluene	ND	1	14	45
4-Chlorotoluene	ND	1	14	44
Dibromochloromethane	ND	1	6.2	21
1,2-Dibromo-3-Chloropropane	ND	1	6.4	20
1,2-Dibromoethane	ND	1	6.9	22
Dibromomethane	ND	1	5.4	18
1,2-Dichlorobenzene	ND	1	14	44
1,3-Dichlorobenzene	ND	1	14	44
1,4-Dichlorobenzene	ND	1	14	45
Dichlorodifluoromethane	ND	1	7.7	27
1,1-Dichloroethane	ND	1	7.1	24
1,2-Dichloroethane	ND	1	7.4	25
1,1-Dichloroethene	ND	1	17	55
cis-1,2-Dichloroethene	ND	1	12	39
trans-1,2-Dichloroethene	ND	1	8.6	32
1,2-Dichloropropane	ND	1	7.0	23
1,3-Dichloropropane	ND	1	10	35
2,2-Dichloropropane	ND	1	9.2	30
1,1-Dichloropropene	ND	1	14	45
cis-1,3-Dichloropropene	ND	1	15	47
trans-1,3-Dichloropropene	ND	1	12	43
Ethylbenzene	39	1	5.4	17
Hexachlorobutadiene	ND	1	14	47
Isopropylbenzene	< 28 >	1	14	45
p-Isopropyltoluene	< 22 >	1	14	44
Methylene chloride	ND	1	5.6	18
Naphthalene	80	1	12	43
n-Propylbenzene	ND	1	14	46
ortho-Xylene/Styrene	ND	1	30	94
1,1,1,2-Tetrachloroethane	ND	1	7.6	25
1,1,2,2-Tetrachloroethane	ND	1	12	43
Tetrachloroethene	ND	1	13	41
Toluene	58	1	14	16
1,2,3-Trichlorobenzene	ND	1	18	59
1,2,4-Trichlorobenzene	ND	1	11	39
1,1,1-Trichloroethane	ND	1	7.2	24
1,1,2-Trichloroethane	ND	1	14	50
Trichloroethene	ND	1	9.4	31
Trichlorofluoromethane	ND	1	5.6	18
1,2,3-Trichloropropane	ND	1	5.0	16
1,2,4-Trimethylbenzene	48	1	14	44

ANALYTICAL RESULTS: VOC's by EPA 8021 - Methanol Extract (CXB)

Customer: Strand Associates, Inc.
Project Description: J-Star Project Title: 1-541-926
Northern Lake Service Project Number: 45670

Analyte Name	189430 Soil, SB-2 2-4 ug/kg	DILUTION FACTOR	LOD ug/kg	LOQ ug/kg
1,3,5-Trimethylbenzene	< 34 >	1	14	45
Vinyl chloride	ND	1	5.0	17
meta,para-Xylene	< 71 >	1	29	93
MTBE	< 21 >	1	8.6	32
Isopropylether	ND	1	10	34

Surrogate Recovery on 2-Bromochlorobenzene (PID) = 92.0 %
Surrogate Recovery on 2-Bromochlorobenzene (HECD) = 102 %

ANALYTICAL RESULTS: VOC's by EPA 8021 - Methanol Extract (CXB)

Customer: Strand Associates, Inc.
Project Description: J-Star Project Title: 1-541-926
Northern Lake Service Project Number: 45670

Analyte Name	189431 Soil, SB-3 10-13 ug/kg	DILUTION FACTOR	LOD ug/kg	LOQ ug/kg
Benzene	ND	1	6.0	19
Bromobenzene	ND	1	16	51
Bromochloromethane	ND	1	6.0	20
Bromodichloromethane	ND	1	6.6	22
Bromoform	ND	1	15	53
Bromomethane	ND	1	6.8	24
n-Butylbenzene	ND	1	11	38
sec-Butylbenzene	ND	1	14	46
tert-Butylbenzene	ND	1	15	46
Carbon Tetrachloride	ND	1	5.2	16
Chlorobenzene	ND	1	5.6	18
Chloroethane	ND	1	6.2	20
Chloroform	ND	1	7.0	23
Chloromethane	ND	1	7.1	25
2-Chlorotoluene	ND	1	14	45
4-Chlorotoluene	ND	1	14	44
Dibromochloromethane	ND	1	6.2	21
1,2-Dibromo-3-Chloropropane	ND	1	6.4	20
1,2-Dibromoethane	ND	1	6.9	22
Dibromomethane	ND	1	5.4	18
1,2-Dichlorobenzene	ND	1	14	44
1,3-Dichlorobenzene	ND	1	14	44
1,4-Dichlorobenzene	ND	1	14	45
Dichlorodifluoromethane	ND	1	7.7	27
1,1-Dichloroethane	ND	1	7.1	24
1,2-Dichloroethane	ND	1	7.4	25
1,1-Dichloroethene	ND	1	17	55
cis-1,2-Dichloroethene	ND	1	12	39
trans-1,2-Dichloroethene	ND	1	8.6	32
1,2-Dichloropropane	ND	1	7.0	23
1,3-Dichloropropane	ND	1	10	35
2,2-Dichloropropane	ND	1	9.2	30
1,1-Dichloropropene	ND	1	14	45
cis-1,3-Dichloropropene	ND	1	15	47
trans-1,3-Dichloropropene	ND	1	12	43
Ethylbenzene	ND	1	5.4	17
Hexachlorobutadiene	ND	1	14	47
Isopropylbenzene	ND	1	14	45
p-Isopropyltoluene	ND	1	14	44
Methylene chloride	< 8.6 >	1	5.6	18
Naphthalene	ND	1	12	43
n-Propylbenzene	ND	1	14	46
ortho-Xylene/Styrene	ND	1	30	94
1,1,1,2-Tetrachloroethane	ND	1	7.6	25
1,1,2,2-Tetrachloroethane	ND	1	12	43
Tetrachloroethene	ND	1	13	41
Toluene	ND	1	14	16
1,2,3-Trichlorobenzene	ND	1	18	59
1,2,4-Trichlorobenzene	ND	1	11	39
1,1,1-Trichloroethane	ND	1	7.2	24
1,1,2-Trichloroethane	ND	1	14	50
Trichloroethene	ND	1	9.4	31
Trichlorofluoromethane	ND	1	5.6	18
1,2,3-Trichloropropane	ND	1	5.0	16
1,2,4-Trimethylbenzene	ND	1	14	44

ANALYTICAL RESULTS: VOC's by EPA 8021 - Methanol Extract (CXB)

Customer: Strand Associates, Inc.
Project Description: J-Star Project Title: 1-541-926
Northern Lake Service Project Number: 45670

Analyte Name	189431 Soil, SB-3 10-13 ug/kg	DILUTION FACTOR	LOD ug/kg	LOQ ug/kg
1,3,5-Trimethylbenzene	ND	1	14	45
Vinyl chloride	ND	1	5.0	17
meta,para-Xylene	ND	1	29	93
MTBE	ND	1	8.6	32
Isopropylether	ND	1	10	34

Surrogate Recovery on 2-Bromochlorobenzene (PID) = 101 %
Surrogate Recovery on 2-Bromochlorobenzene (HECD) = 104 %

ANALYTICAL RESULTS: VOC's by EPA 8021 - Methanol Extract (CXB)

Customer: Strand Associates, Inc.
Project Description: J-Star Project Title: 1-541-926
Northern Lake Service Project Number: 45670

Analyte Name	189432 Soil, SB-4 0-2 ug/kg	DILUTION FACTOR	LOD ug/kg	LOQ ug/kg
Benzene	ND	1	6.0	19
Bromobenzene	ND	1	16	51
Bromochloromethane	ND	1	6.0	20
Bromodichloromethane	ND	1	6.6	22
Bromoform	ND	1	15	53
Bromomethane	ND	1	6.8	24
n-Butylbenzene	ND	1	11	38
sec-Butylbenzene	ND	1	14	46
tert-Butylbenzene	ND	1	15	46
Carbon Tetrachloride	ND	1	5.2	16
Chlorobenzene	ND	1	5.6	18
Chloroethane	ND	1	6.2	20
Chloroform	ND	1	7.0	23
Chloromethane	ND	1	7.1	25
2-Chlorotoluene	ND	1	14	45
4-Chlorotoluene	ND	1	14	44
Dibromochloromethane	ND	1	6.2	21
1,2-Dibromo-3-Chloropropane	ND	1	6.4	20
1,2-Dibromoethane	ND	1	6.9	22
Dibromomethane	ND	1	5.4	18
1,2-Dichlorobenzene	ND	1	14	44
1,3-Dichlorobenzene	ND	1	14	44
1,4-Dichlorobenzene	ND	1	14	45
Dichlorodifluoromethane	ND	1	7.7	27
1,1-Dichloroethane	ND	1	7.1	24
1,2-Dichloroethane	ND	1	7.4	25
1,1-Dichloroethene	ND	1	17	55
cis-1,2-Dichloroethene	ND	1	12	39
trans-1,2-Dichloroethene	ND	1	8.6	32
1,2-Dichloropropane	ND	1	7.0	23
1,3-Dichloropropane	ND	1	10	35
2,2-Dichloropropane	ND	1	9.2	30
1,1-Dichloropropene	ND	1	14	45
cis-1,3-Dichloropropene	ND	1	15	47
trans-1,3-Dichloropropene	ND	1	12	43
Ethylbenzene	ND	1	5.4	17
Hexachlorobutadiene	ND	1	14	47
Isopropylbenzene	ND	1	14	45
p-Isopropyltoluene	ND	1	14	44
Methylene chloride	ND	1	5.6	18
Naphthalene	ND	1	12	43
n-Propylbenzene	ND	1	14	46
ortho-Xylene/Styrene	ND	1	30	94
1,1,1,2-Tetrachloroethane	ND	1	7.6	25
1,1,2,2-Tetrachloroethane	ND	1	12	43
Tetrachloroethene	ND	1	13	41
Toluene	ND	1	14	16
1,2,3-Trichlorobenzene	ND	1	18	59
1,2,4-Trichlorobenzene	ND	1	11	39
1,1,1-Trichloroethane	ND	1	7.2	24
1,1,2-Trichloroethane	ND	1	14	50
Trichloroethene	ND	1	9.4	31
Trichlorofluoromethane	ND	1	5.6	18
1,2,3-Trichloropropane	ND	1	5.0	16
1,2,4-Trimethylbenzene	ND	1	14	44

ANALYTICAL RESULTS: VOC's by EPA 8021 - Methanol Extract (CXB)

Customer: Strand Associates, Inc.
Project Description: J-Star Project Title: 1-541-926
Northern Lake Service Project Number: 45670

Analyte Name	189432 Soil, SB-4 0-2 ug/kg	DILUTION FACTOR	LOD ug/kg	LOQ ug/kg
1,3,5-Trimethylbenzene	ND	1	14	45
Vinyl chloride	ND	1	5.0	17
meta,para-Xylene	ND	1	29	93
MTBE	ND	1	8.6	32
Isopropylether	ND	1	10	34

Surrogate Recovery on 2-Bromochlorobenzene (PID) = 98.0 %
Surrogate Recovery on 2-Bromochlorobenzene (HECD) = 102 %

ANALYTICAL RESULTS: VOC's by EPA 8021 - Methanol Extract (CXB)

Customer: Strand Associates, Inc.
Project Description: J-Star Project Title: 1-541-926
Northern Lake Service Project Number: 45670

Analyte Name	189433 Soil, SB-1 16-17 ug/kg	DILUTION FACTOR	LOD ug/kg	LOQ ug/kg
Benzene	120	1	6.0	19
Bromobenzene	ND	1	16	51
Bromochloromethane	ND	1	6.0	20
Bromodichloromethane	ND	1	6.6	22
Bromoform	ND	1	15	53
Bromomethane	ND	1	6.8	24
n-Butylbenzene	480	1	11	38
sec-Butylbenzene	120	1	14	46
tert-Butylbenzene	170	1	15	46
Carbon Tetrachloride	ND	1	5.2	16
Chlorobenzene	ND	1	5.6	18
Chloroethane	ND	1	6.2	20
Chloroform	ND	1	7.0	23
Chloromethane	ND	1	7.1	25
2-Chlorotoluene	ND	1	14	45
4-Chlorotoluene	ND	1	14	44
Dibromochloromethane	ND	1	6.2	21
1,2-Dibromo-3-Chloropropane	ND	1	6.4	20
1,2-Dibromoethane	ND	1	6.9	22
Dibromomethane	ND	1	5.4	18
1,2-Dichlorobenzene	ND	1	14	44
1,3-Dichlorobenzene	ND	1	14	44
1,4-Dichlorobenzene	ND	1	14	45
Dichlorodifluoromethane	ND	1	7.7	27
1,1-Dichloroethane	ND	1	7.1	24
1,2-Dichloroethane	ND	1	7.4	25
1,1-Dichloroethene	ND	1	17	55
cis-1,2-Dichloroethene	ND	1	12	39
trans-1,2-Dichloroethene	ND	1	8.6	32
1,2-Dichloropropane	ND	1	7.0	23
1,3-Dichloropropane	ND	1	10	35
2,2-Dichloropropane	ND	1	9.2	30
1,1-Dichloropropene	ND	1	14	45
cis-1,3-Dichloropropene	ND	1	15	47
trans-1,3-Dichloropropene	ND	1	12	43
Ethylbenzene	320	1	5.4	17
Hexachlorobutadiene	ND	1	14	47
Isopropylbenzene	190	1	14	45
p-Isopropyltoluene	100	1	14	44
Methylene chloride	ND	1	5.6	18
Naphthalene	82	1	12	43
n-Propylbenzene	200	1	14	46
ortho-Xylene/Styrene	150	1	30	94
1,1,1,2-Tetrachloroethane	ND	1	7.6	25
1,1,2,2-Tetrachloroethane	ND	1	12	43
Tetrachloroethene	ND	1	13	41
Toluene	140	1	14	16
1,2,3-Trichlorobenzene	ND	1	18	59
1,2,4-Trichlorobenzene	ND	1	11	39
1,1,1-Trichloroethane	ND	1	7.2	24
1,1,2-Trichloroethane	ND	1	14	50
Trichloroethene	ND	1	9.4	31
Trichlorofluoromethane	ND	1	5.6	18
1,2,3-Trichloropropane	ND	1	5.0	16
1,2,4-Trimethylbenzene	250	1	14	44

ANALYTICAL RESULTS: VOC's by EPA 8021 - Methanol Extract (CXB)

Customer: Strand Associates, Inc.
Project Description: J-Star Project Title: 1-541-926
Northern Lake Service Project Number: 45670

Analyte Name	189433 Soil, SB-1 16-17 ug/kg	DILUTION FACTOR	LOD ug/kg	LOQ ug/kg
1,3,5-Trimethylbenzene	230	1	14	45
Vinyl chloride	ND	1	5.0	17
meta,para-Xylene	430	1	29	93
MTBE	52	1	8.6	32
Isopropylether	ND	1	10	34

Surrogate Recovery on 2-Bromochlorobenzene (PID) = 94.0 %
Surrogate Recovery on 2-Bromochlorobenzene (HECD) = 104 %

NORTHERN LAKE SERVICE, INC.
Analytical Laboratory and Environmental Services
400 North Lake Avenue • Crandon, WI 54520-1298
Tel: (715) 478-2777 • Fax: (715) 478-3060

SAMPLE COLLECTION AND CHAIN OF CUSTODY RECORD

Underground Storage Tank Projects
Wisconsin Lab Cert. No. 721026460

SOIL

RETURN THIS FORM WITH SAMPLES.

ENTER OTHER PARAMETERS-CHECK BELOW IF FIELD FILTERED

CLIENT	PROJECT TITLE	
Stewart Associates, Inc	J. Stair	
ADDRESS: 90 W. Wilson Dr	PROJECT NO.: 1-5411-926	QUOTATION NO.:
CITY / STATE / ZIP: Madison, WI 53715	CONTACT: Steve Stewart	PHONE: 608/251-4813

NLS LAB. NO.	SAMPLE ID	COLLECTION DATE	COLLECTION TIME	SAMPLE TYPE	GRO	PVOC	DRO	VOC 8021	PAH	lead
139448	Trip Blank (#7213)	12/16/98	1030	SOIL	X		X	X		X
139449	SB-1 10'-11.5' (#7214)	12/21/98	1010	SOIL	X		X	X		X
139450	SB-2 2'-4' (#7215)	12/21/98	1505	SOIL	X		X	X		X
139451	SB-3 10-13' (#7216)	12/21/98	1410	SOIL	X		X	X		X
139452	SB-4 0-2' (#7217)	12/21/98	1200	SOIL	X		X	X		X
139453	SB-1 16-17' (#7218)	12/21/98	1018	SOIL	X		X	X		X

COLLECTED BY (signatures)	CUSTODY SEAL NO. (IF ANY)	DATE/TIME
		12/21/98 1700
RELINQUISHED BY (signature)	RECEIVED BY (signature)	DATE/TIME
		12/22/98 1400
RELINQUISHED BY (signature)	RECEIVED BY (signature)	DATE/TIME
DISPATCHED BY (signature)	METHOD OF TRANSPORT	DATE/TIME

REPORT TO

RECEIVED AT NLS BY (signature)	DATE/TIME	CONDITION	TEMP.
		Intact	
SEAL INTACT? ☐ YES ☐ NO	SEAL #	REMARKS & OTHER INFORMATION	
		Stewart overbright. Use Dunlaw's [illegible]	

INVOICE TO

SAMPLE TYPE GW=groundwater, WW=waste water, DW=drinking water, S=soil

IMPORTANT:
1. TO MEET REGULATORY REQUIREMENTS, THIS FORM MUST BE COMPLETED IN DETAIL AND INCLUDED IN THE SHIPPER CONTAINING THE SAMPLES DESCRIBED.
2. PLEASE USE ONE LINE PER SAMPLE, NOT PER BOTTLE.
3. RETURN THIS FORM WITH SAMPLES - CLIENT MAY KEEP PINK COPY.
4. PARTIES COLLECTING SAMPLE LISTED AS REPORT TO AND LISTED AS INVOICE TO AGREE TO STANDARD TERMS & CONDITIONS ON REVERSE.

CUSTOMER COPY

NORTHERN LAKE SERVICE, INC.
Analytical Laboratory and Environmental Services
400 North Lake Avenue • Crandon, WI 54520-1298
Tel: (715) 478-2777 • Fax: (715) 478-3060

100701

SAMPLE COLLECTION AND CHAIN OF CUSTODY RECORD

Underground Storage Tank Projects
Wisconsin Lab Cert. No. 721026460

WATER

RETURN THIS FORM WITH SAMPLES.

ENTER OTHER PARAMETERS-CHECK BELOW IF FIELD FILTERED

CLIENT	PROJECT TITLE	
Strand Associates, Inc	T-Star	
ADDRESS	PROJECT NO.	QUOTATION NO.
910 W Wingra Dr	1-5411-926	
CITY / STATE / ZIP	CONTACT	PHONE
Madison, WI 53715	Steve Smith	608/251-4843

NLS LAB. NO.	SAMPLE ID	COLLECTION DATE	COLLECTION TIME	SAMPLE TYPE	GRO	PVOC	DRO	VOC 8021	PAH
189434	Trip Blank (#7205)	12/21/98	1030	GW				X	
189435	SB-1 (#7206)	12/21/98	1050	GW				X	
189436	SB-2 (#7207)	12/21/98	1507	GW				X	
189437	SB-3 (#7208)	12/21/98	1410	GW				X	
189438	SB-4 (#7209)	12/21/98	1300	GW				X	
189439	Drum "Sludge" Sample (#7210)	12/21/98	1330	GW				X	
189440	Drum "Water" Sample (#7211)	12/21/98	1400	GW				X	
189441	Tubing Blank (#7212)	12/21/98	1030	GW				X	

COLLECTED BY (signature)		CUSTODY SEAL NO. (IF ANY)	DATE/TIME
[signature]	12/21/98		1700
RELINQUISHED BY (signature)	RECEIVED BY (signature)		DATE/TIME
[signature]	12/22/98		1400
RELINQUISHED BY (signature)	RECEIVED BY (signature)		DATE/TIME
DISPATCHED BY (signature)	METHOD OF TRANSPORT		DATE/TIME

REPORT TO

RECEIVED AT NLS BY (signature)	DATE/TIME	CONDITION	TEMP.
[signature]	12-23-98 11:15	Dry ice	
SEAL INTACT ☐ YES ☐ NO N/A	SEAL #	REMARKS & OTHER INFORMATION	
		Shipped via Deutsch overnight – on ice SSS	

SAMPLE TYPE GW=groundwater, WW=waste water, DW=drinking water, S=soil

* Also note please: Bad septums on this batch – Air bubbles!!

INVOICE TO

IMPORTANT:
1. TO MEET REGULATORY REQUIREMENTS, THIS FORM MUST BE COMPLETED IN DETAIL AND INCLUDED IN THE SHIPPER CONTAINING THE SAMPLES DESCRIBED.
2. PLEASE USE ONE LINE PER SAMPLE, NOT PER BOTTLE.
3. RETURN THIS FORM WITH SAMPLES - CLIENT MAY KEEP PINK COPY.
4. PARTIES COLLECTING SAMPLE, LISTED AS REPORT TO AND LISTED AS INVOICE TO AGREE TO STANDARD TERMS & CONDITIONS ON REVERSE.

CUSTOMER COPY

EN CHEM INC.

1795 Industrial Drive
Green Bay, WI 54302
920-469-2436
800-7-ENCHEM
FAX: 920-469-8827

- Analytical Report -

Project Name : J-STAR

Project Number : 1. 541-926

WI DNR LAB ID : 405132750

Client: STRAND ASSOCIATES INC

Sample No.	Field ID	Collection Date	Sample No.	Field ID	Collection Date
895029-001	MW-1	8/31/99			
895029-002	PZ-1	8/31/99			
895029-003	MW-2	8/31/99			
895029-004	MW-4	8/31/99			
895029-005	BAILER BLANK	8/31/99			
895029-006	DUPLICATE	8/31/99			
895029-007	TRIP BLANK	8/31/99			

The "Q" flag is present when a parameter has been detected below the LOQ. This indicates the results are qualified due to the uncertainty of the parameter concentration between the LOD and the LOQ.

Soil VOC detects are corrected for the total solids, unless otherwise noted.

I certify that the data contained in this Final Report has been generated and reviewed in accordance with approved methods and Laboratory Standard Operating Procedure. Exceptions, if any, are discussed in the accompanying sample narrative. Release of this final report is authorized by Laboratory management, as is verified by the following signature.

J. Duranceau — 9/20/99

Approval Signature — Date

EN CHEM INC.

1795 Industrial Drive
Green Bay, WI 54302
920-469-2436
800-7-ENCHEM
FAX: 920-469-8827

- Analytical Report -

Project Name : J-STAR

Project Number : 1. 541-926

Field ID : MW-1

Lab Sample Number : 895029-001

WI DNR LAB ID : 405132750

Client : STRAND ASSOCIATES INC

Report Date : 9/20/99

Collection Date : 8/31/99

Matrix Type : WATER

Inorganic Results

Test	Result	LOD	LOQ	EQL	Units	Code	Analysis Date	Prep Method	Analysis Method	Analys
Lead - Dissolved	< 2.8	2.8	8.9		ug/L		9/16/99	SW846 6010B	SW846 6010B	*MD

Organic Results

DIESEL RANGE ORGANICS - WATER Prep Method: Wi MOD DRO Prep Date: 9/3/99 Analyst: DJB

Analyte	Result	LOD	LOQ	EQL	Units	Code	Analysis Date	Analysis Method
DIESEL RANGE ORGANICS	160			100	ug/l		9/3/99	Wi MOD DRO
Blank spike	94			25	%Recov		9/3/99	Wi MOD DRO
Blank spike duplicate	107			25.0	%Recov		9/3/99	Wi MOD DRO
Blank	< 50			50	ug/l		9/3/99	Wi MOD DRO

Organic Results

GASOLINE RANGE ORGANICS - WATER Prep Method: Wi MOD GRO Prep Date: 9/3/99 Analyst: EGS

Analyte	Result	LOD	LOQ	EQL	Units	Code	Analysis Date	Analysis Method
GASOLINE RANGE ORGANICS	82			50	ug/l		9/3/99	Wi MOD GRO
Blank Spike	105			1.00	%Recov		9/3/99	Wi MOD GRO
Blank Spike Duplicate	103			1.00	%Recov		9/3/99	Wi MOD GRO
Blank	< 50			50	ug/l		9/3/99	Wi MOD GRO

Organic Results

PVOC - WATER Prep Method: SW846 5030B Prep Date: 9/3/99 Analyst: EGS

Analyte	Result	LOD	LOQ	EQL	Units	Code	Analysis Date	Analysis Method
a,a,a-Trifluorotoluene	100				%Recov		9/3/99	MOD 8021B
Benzene	3.1	0.26	0.83		ug/l		9/3/99	MOD 8021B
Ethylbenzene	5.2	0.24	0.76		ug/l		9/3/99	MOD 8021B
Methyl-tert-butyl-ether	< 0.22	0.22	0.70		ug/l		9/3/99	MOD 8021B
Toluene	6.0	0.21	0.67		ug/l		9/3/99	MOD 8021B
1,3,5-Trimethylbenzene	1.9	0.54	1.7		ug/l		9/3/99	MOD 8021B
1,2,4-Trimethylbenzene	5.4	0.86	2.7		ug/l		9/3/99	MOD 8021B

EN CHEM INC.
1795 Industrial Drive
Green Bay, WI 54302
920-469-2436
800-7-ENCHEM
Fax: 920-469-8827

- Analytical Report -

Project Name : J-STAR

Project Number : 1. 541-926

Field ID : MW-1

Lab Sample Number : 895029-001

WI DNR LAB ID : 405132750

Client : STRAND ASSOCIATES INC

Report Date : 9/20/99

Collection Date : 8/31/99

Matrix Type : WATER

Xylenes, -m, -p	14	0.97	3.1	ug/l	9/3/99	MOD 8021B
Xylene, -o	2.4	0.37	1.2	ug/l	9/3/99	MOD 8021B

EN CHEM INC.

1795 Industrial Drive
Green Bay, WI 54302
920-469-2436
800-7-ENCHEM
FAX: 920-469-8827

- Analytical Report -

Project Name : J-STAR

Project Number : 1. 541-926

Field ID : PZ-1

Lab Sample Number : 895029-002

WI DNR LAB ID : 405132750

Client : STRAND ASSOCIATES INC

Report Date : 9/20/99

Collection Date : 8/31/99

Matrix Type : WATER

Inorganic Results

Test	Result	LOD	LOQ	EQL	Units	Code	Analysis Date	Prep Method	Analysis Method	Analys
Lead - Dissolved	< 2.8	2.8	8.9		ug/L		9/16/99	SW846 6010B	SW846 6010B	*MD

Organic Results

DIESEL RANGE ORGANICS - WATER Prep Method: Wi MOD DRO Prep Date: 9/3/99 Analyst: DJB

Analyte	Result	LOD	LOQ	EQL	Units	Code	Analysis Date	Analysis Method
DIESEL RANGE ORGANICS	540			100	ug/l		9/3/99	Wi MOD DRO
Blank spike	94			25	%Recov		9/3/99	Wi MOD DRO
Blank spike duplicate	107			25.0	%Recov		9/3/99	Wi MOD DRO
Blank	< 50			50	ug/l		9/3/99	Wi MOD DRO

Organic Results

GASOLINE RANGE ORGANICS - WATER Prep Method: Wi MOD GRO Prep Date: 9/3/99 Analyst: EGS

Analyte	Result	LOD	LOQ	EQL	Units	Code	Analysis Date	Analysis Method
GASOLINE RANGE ORGANICS	2300			130	ug/l		9/7/99	Wi MOD GRO
Blank Spike	105			1.00	%Recov		9/7/99	Wi MOD GRO
Blank Spike Duplicate	102			1.00	%Recov		9/7/99	Wi MOD GRO
Blank	< 50			50	ug/l		9/7/99	Wi MOD GRO

Organic Results

PVOC - WATER Prep Method: SW846 5030B Prep Date: 9/3/99 Analyst: EGS

Analyte	Result	LOD	LOQ	EQL	Units	Code	Analysis Date	Analysis Method
a,a,a-Trifluorotoluene	100				%Recov		9/7/99	MOD 8021B
Benzene	40	0.65	2.1		ug/l		9/7/99	MOD 8021B
Ethylbenzene	64	0.60	1.9		ug/l		9/7/99	MOD 8021B
Methyl-tert-butyl-ether	2.9	0.55	1.8		ug/l		9/7/99	MOD 8021B
Toluene	280	0.53	1.7		ug/l		9/7/99	MOD 8021B
1,3,5-Trimethylbenzene	40	1.4	4.5		ug/l		9/7/99	MOD 8021B
1,2,4-Trimethylbenzene	120	2.1	6.7		ug/l		9/7/99	MOD 8021B

EN CHEM INC.

1795 Industrial Drive
Green Bay, WI 54302
920-469-2436
800-7-ENCHEM
FAX: 920-469-8827

- Analytical Report -

Project Name : J-STAR

Project Number : 1. 541-926

Field ID : PZ-1

Lab Sample Number : 895029-002

WI DNR LAB ID : 405132750

Client : STRAND ASSOCIATES INC

Report Date : 9/20/99

Collection Date : 8/31/99

Matrix Type : WATER

Xylenes, -m, -p	230	2.4	7.6	ug/l	9/7/99	MOD 8021B
Xylene, -o	87	0.92	2.9	ug/l	9/7/99	MOD 8021B

EN CHEM INC.
1795 Industrial Drive
Green Bay, WI 54302
920-469-2436
800-7-ENCHEM
FAX: 920-469-8827

- Analytical Report -

Project Name : J-STAR
Project Number : 1. 541-926
Field ID : MW-2
Lab Sample Number : 895029-003
WI DNR LAB ID : 405132750

Client : STRAND ASSOCIATES INC
Report Date : 9/20/99
Collection Date : 8/31/99
Matrix Type : WATER

Inorganic Results

Test	Result	LOD	LOQ	EQL	Units	Code	Analysis Date	Prep Method	Analysis Method	Analys
Lead - Dissolved	< 2.8	2.8	8.9		ug/L		9/16/99	SW846 6010B	SW846 6010B	*MD

Organic Results

DIESEL RANGE ORGANICS - WATER Prep Method: Wi MOD DRO Prep Date: 9/3/99 Analyst: DJB

Analyte	Result	LOD	LOQ	EQL	Units	Code	Analysis Date	Analysis Method
DIESEL RANGE ORGANICS	180			100	ug/l		9/3/99	Wi MOD DRO
Blank spike	94			25	%Recov		9/3/99	Wi MOD DRO
Blank spike duplicate	107			25.0	%Recov		9/3/99	Wi MOD DRO
Blank	< 50			50	ug/l		9/3/99	Wi MOD DRO

Organic Results

GASOLINE RANGE ORGANICS - WATER Prep Method: Wi MOD GRO Prep Date: 9/3/99 Analyst: EGS

Analyte	Result	LOD	LOQ	EQL	Units	Code	Analysis Date	Analysis Method
GASOLINE RANGE ORGANICS	< 50			50	ug/l		9/3/99	Wi MOD GRO
Blank Spike	105			1.00	%Recov		9/3/99	Wi MOD GRO
Blank Spike Duplicate	103			1.00	%Recov		9/3/99	Wi MOD GRO
Blank	< 50			50	ug/l		9/3/99	Wi MOD GRO

Organic Results

PVOC - WATER Prep Method: SW846 5030B Prep Date: 9/3/99 Analyst: EGS

Analyte	Result	LOD	LOQ	EQL	Units	Code	Analysis Date	Analysis Method
a,a,a-Trifluorotoluene	102				%Recov		9/3/99	MOD 8021B
Benzene	0.77	0.26	0.83		ug/l	Q	9/3/99	MOD 8021B
Ethylbenzene	< 0.24	0.24	0.76		ug/l		9/3/99	MOD 8021B
Methyl-tert-butyl-ether	< 0.22	0.22	0.70		ug/l		9/3/99	MOD 8021B
Toluene	0.45	0.21	0.67		ug/l	Q	9/3/99	MOD 8021B
1,3,5-Trimethylbenzene	< 0.54	0.54	1.7		ug/l		9/3/99	MOD 8021B
1,2,4-Trimethylbenzene	< 0.86	0.86	2.7		ug/l		9/3/99	MOD 8021B

EN CHEM INC.
1795 Industrial Drive
Green Bay, WI 54302
920-469-2436
800-7-ENCHEM
FAX: 920-469-8827

- Analytical Report -

Project Name : J-STAR

Project Number : 1. 541-926

Client : STRAND ASSOCIATES INC

Field ID : MW-2

Report Date : 9/20/99

Lab Sample Number : 895029-003

Collection Date : 8/31/99

WI DNR LAB ID : 405132750

Matrix Type : WATER

Xylenes, -m, -p	< 0.97	0.97	3.1	ug/l	9/3/99	MOD 8021B
Xylene, -o	< 0.37	0.37	1.2	ug/l	9/3/99	MOD 8021B

EN CHEM INC.

1795 Industrial Drive
Green Bay, WI 54302
920-469-2436
800-7-ENCHEM
FAX: 920-469-8827

- Analytical Report -

Project Name : J-STAR

Project Number : 1. 541-926

Field ID : MW-4

Lab Sample Number : 895029-004

WI DNR LAB ID : 405132750

Client : STRAND ASSOCIATES INC

Report Date : 9/20/99

Collection Date : 8/31/99

Matrix Type : WATER

Inorganic Results

Test	Result	LOD	LOQ	EQL	Units	Code	Analysis Date	Prep Method	Analysis Method	Analys
Lead - Dissolved	3.1	2.8	8.9		ug/L	Q	9/16/99	SW846 6010B	SW846 6010B	*MD

Organic Results

DIESEL RANGE ORGANICS - WATER Prep Method: Wi MOD DRO Prep Date: 9/3/99 Analyst: DJB

Analyte	Result	LOD	LOQ	EQL	Units	Code	Analysis Date	Analysis Method
DIESEL RANGE ORGANICS	1600			100	ug/l		9/3/99	Wi MOD DRO
Blank spike	94			25	%Recov		9/3/99	Wi MOD DRO
Blank spike duplicate	107			25.0	%Recov		9/3/99	Wi MOD DRO
Blank	< 50			50	ug/l		9/3/99	Wi MOD DRO

Organic Results

GASOLINE RANGE ORGANICS - WATER Prep Method: Wi MOD GRO Prep Date: 9/3/99 Analyst: EGS

Analyte	Result	LOD	LOQ	EQL	Units	Code	Analysis Date	Analysis Method
GASOLINE RANGE ORGANICS	700			50	ug/l		9/3/99	Wi MOD GRO
Blank Spike	105			1.00	%Recov		9/3/99	Wi MOD GRO
Blank Spike Duplicate	103			1.00	%Recov		9/3/99	Wi MOD GRO
Blank	< 50			50	ug/l		9/3/99	Wi MOD GRO

Organic Results

PVOC - WATER Prep Method: SW846 5030B Prep Date: 9/3/99 Analyst: EGS

Analyte	Result	LOD	LOQ	EQL	Units	Code	Analysis Date	Analysis Method
a,a,a-Trifluorotoluene	148				%Recov		9/3/99	MOD 8021B
Benzene	1.2	0.26	0.83		ug/l		9/3/99	MOD 8021B
Ethylbenzene	9.0	0.24	0.76		ug/l		9/3/99	MOD 8021B
Methyl-tert-butyl-ether	< 0.22	0.22	0.70		ug/l		9/3/99	MOD 8021B
Toluene	8.9	0.21	0.67		ug/l		9/3/99	MOD 8021B
1,3,5-Trimethylbenzene	2.0	0.54	1.7		ug/l		9/3/99	MOD 8021B
1,2,4-Trimethylbenzene	4.4	0.86	2.7		ug/l		9/3/99	MOD 8021B

EN CHEM INC.
1795 Industrial Drive
Green Bay, WI 54302
920-469-2436
800-7-ENCHEM
FAX: 920-469-8827

- Analytical Report -

Project Name : J-STAR

Project Number : 1. 541-926

Client : STRAND ASSOCIATES INC

Field ID : MW-4

Report Date : 9/20/99

Lab Sample Number : 895029-004

Collection Date : 8/31/99

WI DNR LAB ID : 405132750

Matrix Type : WATER

Xylenes, -m, -p	11	0.97	3.1	ug/l	9/3/99	MOD 8021B
Xylene, -o	4.0	0.37	1.2	ug/l	9/3/99	MOD 8021B

EN CHEM INC.

1795 Industrial Drive
Green Bay, WI 54302
920-469-2436
800-7-ENCHEM
FAX: 920-469-8827

- Analytical Report -

Project Name : J-STAR

Project Number : 1. 541-926

Field ID : BAILER BLANK

Lab Sample Number : 895029-005

WI DNR LAB ID : 405132750

Client : STRAND ASSOCIATES INC

Report Date : 9/20/99

Collection Date : 8/31/99

Matrix Type : WATER

Inorganic Results

Test		Result	LOD	LOQ	EQL	Units	Code	Analysis Date	Prep Method	Analysis Method	Analys
Lead - Dissolved	<	2.8	2.8	8.9		ug/L		9/16/99	SW846 6010B	SW846 6010B	*MD

Organic Results

DIESEL RANGE ORGANICS - WATER Prep Method: Wi MOD DRO Prep Date: 9/3/99 Analyst: DJB

Analyte		Result	LOD	LOQ	EQL	Units	Code	Analysis Date	Analysis Method
DIESEL RANGE ORGANICS	<	100			100	ug/l		9/3/99	Wi MOD DRO
Blank spike		94			25	%Recov		9/3/99	Wi MOD DRO
Blank spike duplicate		107			25.0	%Recov		9/3/99	Wi MOD DRO
Blank	<	50			50	ug/l		9/3/99	Wi MOD DRO

Organic Results

GASOLINE RANGE ORGANICS - WATER Prep Method: Wi MOD GRO Prep Date: 9/3/99 Analyst: EGS

Analyte		Result	LOD	LOQ	EQL	Units	Code	Analysis Date	Analysis Method
GASOLINE RANGE ORGANICS	<	50			50	ug/l		9/3/99	Wi MOD GRO
Blank Spike		105			1.00	%Recov		9/3/99	Wi MOD GRO
Blank Spike Duplicate		103			1.00	%Recov		9/3/99	Wi MOD GRO
Blank	<	50			50	ug/l		9/3/99	Wi MOD GRO

Organic Results

PVOC - WATER Prep Method: SW846 5030B Prep Date: 9/3/99 Analyst: EGS

Analyte		Result	LOD	LOQ	EQL	Units	Code	Analysis Date	Analysis Method
a,a,a-Trifluorotoluene		103				%Recov		9/3/99	MOD 8021B
Benzene	<	0.26	0.26	0.83		ug/l		9/3/99	MOD 8021B
Ethylbenzene	<	0.24	0.24	0.76		ug/l		9/3/99	MOD 8021B
Methyl-tert-butyl-ether	<	0.22	0.22	0.70		ug/l		9/3/99	MOD 8021B
Toluene		0.25	0.21	0.67		ug/l	Q	9/3/99	MOD 8021B
1,3,5-Trimethylbenzene	<	0.54	0.54	1.7		ug/l		9/3/99	MOD 8021B
1,2,4-Trimethylbenzene	<	0.86	0.86	2.7		ug/l		9/3/99	MOD 8021B

EN CHEM INC.

1795 Industrial Drive
Green Bay, WI 54302
920-469-2436
800-7-ENCHEM
FAX: 920-469-8827

- Analytical Report -

Project Name : J-STAR

Project Number : 1. 541-926

Client : STRAND ASSOCIATES INC

Field ID : BAILER BLANK

Report Date : 9/20/99

Lab Sample Number : 895029-005

Collection Date : 8/31/99

WI DNR LAB ID : 405132750

Matrix Type : WATER

Xylenes, -m, -p	< 0.97	0.97	3.1	ug/l	9/3/99	MOD 8021B
Xylene, -o	< 0.37	0.37	1.2	ug/l	9/3/99	MOD 8021B

EN CHEM INC.
1795 Industrial Drive
Green Bay, WI 54302
920-469-2436
800-7-ENCHEM
FAX: 920-469-8827

- Analytical Report -

Project Name : J-STAR
Project Number : 1. 541-926
Field ID : DUPLICATE — MW-4
Lab Sample Number : 895029-006
WI DNR LAB ID : 405132750

Client : STRAND ASSOCIATES INC
Report Date : 9/20/99
Collection Date : 8/31/99
Matrix Type : WATER

Inorganic Results

Test	Result	LOD	LOQ	EQL	Units	Code	Analysis Date	Prep Method	Analysis Method	Analys
Lead - Dissolved	< 2.8	2.8	8.9		ug/L		9/16/99	SW846 6010B	SW846 6010B	*MD

Organic Results

DIESEL RANGE ORGANICS - WATER Prep Method: Wi MOD DRO Prep Date: 9/3/99 Analyst: DJB

Analyte	Result	LOD	LOQ	EQL	Units	Code	Analysis Date	Analysis Method
DIESEL RANGE ORGANICS	630			100	ug/l		9/3/99	Wi MOD DRO
Blank spike	94			25	%Recov		9/3/99	Wi MOD DRO
Blank spike duplicate	107			25.0	%Recov		9/3/99	Wi MOD DRO
Blank	< 50			50	ug/l		9/3/99	Wi MOD DRO

Organic Results

GASOLINE RANGE ORGANICS - WATER Prep Method: Wi MOD GRO Prep Date: 9/3/99 Analyst: EGS

Analyte	Result	LOD	LOQ	EQL	Units	Code	Analysis Date	Analysis Method
GASOLINE RANGE ORGANICS	710			50	ug/l		9/3/99	Wi MOD GRO
Blank Spike	105			1.00	%Recov		9/3/99	Wi MOD GRO
Blank Spike Duplicate	103			1.00	%Recov		9/3/99	Wi MOD GRO
Blank	< 50			50	ug/l		9/3/99	Wi MOD GRO

Organic Results

PVOC - WATER Prep Method: SW846 5030B Prep Date: 9/3/99 Analyst: EGS

Analyte	Result	LOD	LOQ	EQL	Units	Code	Analysis Date	Analysis Method
a,a,a-Trifluorotoluene	150				%Recov		9/3/99	MOD 8021B
Benzene	1.0	0.26	0.83		ug/l		9/3/99	MOD 8021B
Ethylbenzene	9.1	0.24	0.76		ug/l		9/3/99	MOD 8021B
Methyl-tert-butyl-ether	< 0.22	0.22	0.70		ug/l		9/3/99	MOD 8021B
Toluene	7.3	0.21	0.67		ug/l		9/3/99	MOD 8021B
1,3,5-Trimethylbenzene	2.0	0.54	1.7		ug/l		9/3/99	MOD 8021B
1,2,4-Trimethylbenzene	4.5	0.86	2.7		ug/l		9/3/99	MOD 8021B

EN CHEM INC.
1795 Industrial Drive
Green Bay, WI 54302
920-469-2436
800-7-ENCHEM
FAX: 920-469-8827

- Analytical Report -

Project Name : J-STAR

Project Number : 1. 541-926

Client : STRAND ASSOCIATES INC

Field ID : DUPLICATE

Report Date : 9/20/99

Lab Sample Number : 895029-006

Collection Date : 8/31/99

WI DNR LAB ID : 405132750

Matrix Type : WATER

Xylenes, -m, -p	10	0.97	3.1	ug/l	9/3/99	MOD 8021B
Xylene, -o	3.7	0.37	1.2	ug/l	9/3/99	MOD 8021B

EN CHEM INC.
1795 Industrial Drive
Green Bay, WI 54302
920-469-2436
800-7-ENCHEM
FAX: 920-469-8827

- Analytical Report -

Project Name : J-STAR
Project Number : 1. 541-926
Field ID : TRIP BLANK
Lab Sample Number : 895029-007
WI DNR LAB ID : 405132750

Client : STRAND ASSOCIATES INC
Report Date : 9/20/99
Collection Date : 8/31/99
Matrix Type : WATER

Organic Results

GASOLINE RANGE ORGANICS - WATER Prep Method: Wi MOD GRO Prep Date: 9/3/99 Analyst: EGS

Analyte	Result	LOD	LOQ	EQL	Units	Code	Analysis Date	Analysis Method
GASOLINE RANGE ORGANICS	< 50			50	ug/l		9/3/99	Wi MOD GRO
Blank Spike	105			1.00	%Recov		9/3/99	Wi MOD GRO
Blank Spike Duplicate	103			1.00	%Recov		9/3/99	Wi MOD GRO
Blank	< 50			50	ug/l		9/3/99	Wi MOD GRO

Organic Results

PVOC - WATER Prep Method: SW846 5030B Prep Date: 9/3/99 Analyst: EGS

Analyte	Result	LOD	LOQ	EQL	Units	Code	Analysis Date	Analysis Method
a,a,a-Trifluorotoluene	102				%Recov		9/3/99	MOD 8021B
Benzene	< 0.26	0.26	0.83		ug/l		9/3/99	MOD 8021B
Ethylbenzene	< 0.24	0.24	0.76		ug/l		9/3/99	MOD 8021B
Methyl-tert-butyl-ether	< 0.22	0.22	0.70		ug/l		9/3/99	MOD 8021B
Toluene	< 0.21	0.21	0.67		ug/l		9/3/99	MOD 8021B
1,3,5-Trimethylbenzene	< 0.54	0.54	1.7		ug/l		9/3/99	MOD 8021B
1,2,4-Trimethylbenzene	< 0.86	0.86	2.7		ug/l		9/3/99	MOD 8021B
Xylenes, -m, -p	< 0.97	0.97	3.1		ug/l		9/3/99	MOD 8021B
Xylene, -o	< 0.37	0.37	1.2		ug/l		9/3/99	MOD 8021B

EN CHEM INC.

1795 Industrial Drive
Green Bay, WI 54302
920-469-2436
800-7-ENCHEM
FAX: 920-469-8827

Lab#:	TestGroupID:	Comment:
895029-001 MW-1	GRO-W	Early peaks were present outside of window.
	DRO-W	Front peaks and late eluting peaks present in the chromatogram.
895029-002 PZ-1	GRO-W	Early and late peaks were present outside of window.
	DRO-W	Early peaks present outside of window of analysis.
895029-004 MW-4	PVOC-W	The PVOC surrogate recovery was above limits due to co-elution with non-target compounds.
	GRO-W	Early and late peaks were present outside of window.
	DRO-W	Early peaks present outside of window of analysis.
895029-006 DUPLICATE	PVOC-W	The PVOC surrogate recovery was above limits due to co-elution with non-target compounds.
	GRO-W	Early and late peaks were present outside of window.
	DRO-W	Early peaks present outside of window of analysis.

Documentation of Subcontracted Analysis

Listed below are the labs used for subcontracted analysis and associated FID number.

Code	Laboratory	Wisconsin FID Number
*MD	En Chem Madison	113172950
*GB	En Chem Green Bay	405132750
*SP	En Chem Superior	816079330
*RL	Robert E. Lee	405043870
*NL	Northern Lakes Service	721026460
*SF	Sommer - Frey	241249360
*CT	Commonwealth Tech.	157066030
*QO	Quanterrra - North Canton, OH	999518190
*QP	Quanterra - Pittsburgh, PA	998027800
*KM	Kemron - Merietta, OH	998202040

*SUB Indicates analysis that requires no certification

Company Name: J-STAR
Branch or Location: C/O STRAND ASSOCIATES
Project Contact: Luke Hellermann
Telephone: 608-251-4843
Project Number: 1.541-926
Project Name: J-STAR
Project State: Fort Atkinson, WI
Sampled By (Print): Jim McCarthy / Luke Hellermann
Regulatory Program (circle): UST RCRA CLP SDWA NPDES/WPDES CAA NR____ Other ____

EN CHEM INC.

1241 Bellevue St., Suite 9
Green Bay, WI 54302
920-469-2436 • 1-800-736-2436
FAX 920-469-8827

525 Science Drive
Madison, WI 53711
608-232-3300 • 1-888-536-2436
FAX: 608-233-0502

1423 N. 8th Street, Suite 122
Superior, WI 54880
715-392-5844 • 1-800-837-8238
FAX 715-392-5843

CHAIN OF CUSTODY

36585

Page 1 of 1
P.O. # ____ Quote # ____
Mail Report To: Luke Hellermann
Company: 910 W. Wingra Dr.
Address: Madison, WI 53719
Invoice To: STRAND
Company: Same
Address: "
"
Mail Invoice To: Luke Hellermann

FIELD ID	SAMPLE DESCRIPTION	COLLECTION DATE	COLLECTION TIME	PVOC's	GRO/DRO	Lead					FIELD SCREEN	MATRIX	GOOD COND.	TOTAL BOTTLES	COMMENTS	LABORATORY NUMBER
				FILTERED? (YES/NO)		X										
				PRESERVATION (CODE)*	B	B	D									
	MW-1	8/31/99	11:30	X	X	X					NA	Water	✓	1-Liter 3-40ml	Lead in GB	895029-001
	PZ-1	↓	11:00	X	X	X					↓	↓	↓	↓		-002
	MW-2	↓	12:15	X	X	X					↓	↓	↓	↓		-003
	MW-4	↓	10:30	X	X	X					↓	↓	↓	↓		-004
	Bailer Blank	↓	12:30	X	X	X					↓	↓	↓	↓		-005
	~~Trip~~ Duplicate	↓	—	X	X	X					↓	↓	↓	↓		-006
	Trip Blank												✓	2-40ml		007
	sent + added by lab RA															

*Preservation Code
A=None B=HCL C=H2SO4
D=HN03 E=EnCore F=Methanol**
G=NaOH O=Other (Indicate)

**If not using En Chem's methanol, indicate volume of methanol added and mark the appropriate samples.

Relinquished By:	Date/Time:	Received By:	Date/Time:
Jane R. McCarthy	8/31/99 2:00 pm	Kris Mip	8/31/99 4:15pm
Kris Mip	9/1/99 11:00	Judy Morrow	9-2-99 9:30
Judy Morrow	9/2/99 12:00	G. Oacker	9/2/99 12:20
G. Oacker	9/2/99 1545	Rita Mentz	9/2/99 1545

En Chem Project No.: 895029
Sample Receipt Temp.: Roi 5°C
Sample Receipt pH (Wet/Metals):
Custody Seal: N

EN CHEM INC.

1795 Industrial Drive
Green Bay, WI 54302
920-469-2436
800-7-ENCHEM
FAX: 920-469-8827

- Analytical Report -

Project Name : J-STAR UST

Project Number : 1-541-926

Client: STRAND ASSOCIATES INC

WI DNR LAB ID : 405132750

Sample No.	Field ID	Collection Date	Sample No.	Field ID	Collection Date
895925-001	MW-3	10/5/99			

Please visit our Internet homepage at: www.encheminc.com

The "Q" flag is present when a parameter has been detected below the LOQ. This indicates the results are qualified due to the uncertainty of the parameter concentration between the LOD and the LOQ.

Soil VOC detects are corrected for the total solids, unless otherwise noted.

I certify that the data contained in this Final Report has been generated and reviewed in accordance with approved methods and Laboratory Standard Operating Procedure. Exceptions, if any, are discussed in the accompanying sample comments. Release of this final report is authorized by Laboratory management, as is verified by the following signature. Reported results shall not be reproduced, except in full, without the written approval of the lab. The sample results relate only to the analytes of interest tested.

G. Duranceau — 10/18/99

Approval Signature — Date

En Chem Inc.

1795 Industrial Drive
Green Bay, WI 54302
920-469-2436
800-7-ENCHEM
Fax: 920-469-8827

- Analytical Report -

Project Name : J-STAR UST
Project Number : 1-541-926
Field ID : MW-3
Lab Sample Number : 895925-001
WI DNR LAB ID : 405132750

Client : STRAND ASSOCIATES INC
Report Date : 10/15/99
Collection Date : 10/5/99
Matrix Type : WATER

Inorganic Results

Test	Result	LOD	LOQ	EQL	Units	Code	Analysis Date	Prep Method	Analysis Method	Analys
Lead - Dissolved	< 2.8	2.8	8.9		ug/L		10/13/99	SW846 6010B	SW846 6010B	*MD

Organic Results

DIESEL RANGE ORGANICS - WATER Prep Method: Wi MOD DRO Prep Date: 10/8/99 Analyst: DJB

Analyte	Result	LOD	LOQ	EQL	Units	Code	Analysis Date	Analysis Method
DIESEL RANGE ORGANICS	120			100	ug/l		10/8/99	Wi MOD DRO
Blank spike	87			25	%Recov		10/8/99	Wi MOD DRO
Blank spike duplicate	94			25	%Recov		10/8/99	Wi MOD DRO
Blank	< 50			50	ug/l		10/8/99	Wi MOD DRO

Organic Results

GASOLINE RANGE ORGANICS - WATER Prep Method: Wi MOD GRO Prep Date: 10/8/99 Analyst: MSB

Analyte	Result	LOD	LOQ	EQL	Units	Code	Analysis Date	Analysis Method
GASOLINE RANGE ORGANICS	< 50			50	ug/l		10/8/99	Wi MOD GRO
Blank Spike	96			1.0	%Recov		10/8/99	Wi MOD GRO
Blank Spike Duplicate	102			1.00	%Recov		10/8/99	Wi MOD GRO
Blank	< 50			50	ug/l		10/8/99	Wi MOD GRO

Organic Results

PVOC - WATER Prep Method: SW846 5030B Prep Date: 10/8/99 Analyst: MSB

Analyte	Result	LOD	LOQ	EQL	Units	Code	Analysis Date	Analysis Method
a,a,a-Trifluorotoluene	100				%Recov		10/8/99	MOD 8021B
Benzene	< 0.26	0.26	0.83		ug/l		10/8/99	MOD 8021B
Ethylbenzene	< 0.24	0.24	0.76		ug/l		10/8/99	MOD 8021B
Methyl-tert-butyl-ether	< 0.22	0.22	0.70		ug/l		10/8/99	MOD 8021B
Toluene	< 0.21	0.21	0.67		ug/l		10/8/99	MOD 8021B
1,3,5-Trimethylbenzene	< 0.54	0.54	1.7		ug/l		10/8/99	MOD 8021B
1,2,4-Trimethylbenzene	< 0.86	0.86	2.7		ug/l		10/8/99	MOD 8021B
Xylenes, -m, -p	< 0.97	0.97	3.1		ug/l		10/8/99	MOD 8021B
Xylene, -o	< 0.37	0.37	1.2		ug/l		10/8/99	MOD 8021B

En Chem Inc.

1795 Industrial Drive
Green Bay, WI 54302
920-469-2436
800-7-ENCHEM
Fax: 920-469-8827

Lab#:	TestGroupID:	Comment:
895925-001	DRO-W	Hump was present late in chromatogram.
MW-3		

Documentation of Subcontracted Analysis

Listed below are the labs used for subcontracted analysis and associated FID number.

Code	Laboratory	Wisconsin FID Number
*MD	En Chem Madison	113172950
*GB	En Chem Green Bay	405132750
*SP	En Chem Superior	816079330
*RL	Robert E. Lee	405043870
*NL	Northern Lakes Service	721026460
*SF	Sommer - Frey	241249360
*CT	Commonwealth Tech.	157066030
*QO	Quanterrra - North Canton, OH	999518190
*QP	Quanterra - Pittsburgh, PA	998027800
*KM	Kemron - Merietta, OH	998202040

*SUB Indicates analysis that requires no certification

Company Name: Strand
Branch or Location: Madison
Project Contact: Luke Hellermann
Telephone: 251-4843
Project Number: 1-541-926
Project State: WI
Project Name: J-Star UST
Sampled By (Print): Luke Hellermann

Regulatory Program (circle): UST RCRA CLP SDWA NPDES/WPDES CAA NR____ Other ____

EN CHEM INC.

1241 Bellevue St., Suite 9
Green Bay, WI 54302
920-469-2436 • 1-800-736-2436
FAX 920-469-8827

525 Science Drive
Madison, WI 53711
608-232-3300 • 1-888-536-2436
FAX: 608-233-0502

1423 N. 8th Street, Suite 122
Superior, WI 54880
715-392-5844 • 1-800-837-8238
FAX 715-392-5843

CHAIN OF CUSTODY 36518

Page 1 of 1
P.O. # ____ Quote # FECFA
Mail Report To: Luke Hellermann
Company: Strand
Address: 910 W. Wingra Drive
Madison 53715
Invoice To: Luke Hellermann
Company:
Address:
Mail Invoice To: ——

				FILTERED? (YES/NO)	N	N	N	Y											
				PRESERVATION (CODE)*	B	B	B	D											
				ANALYSES REQUESTED	GRO	DRO	PVOCs	lead (dissolved)											
FIELD ID	SAMPLE DESCRIPTION	COLLECTION DATE	COLLECTION TIME										FIELD SCREEN	MATRIX	GOOD COND.	TOTAL BOTTLES	COMMENTS	LABORATORY NUMBER
MW-3		10-5-99	12:00		X	X	X	X					NA	Water		6		895925-001

Commonwealth
Technology, Inc.
Laboratory Division

1230 Lange Court
Baraboo, WI 53913-3109
Phone: (800) 228-3012
Fax: (608) 356-2766
EMail: bld@ctienv.com

ANALYTICAL REPORT

STRAND ASSOCIATES
TROY LARSEN
910 W WINGRA DR
MADISON, WI 53715

Project Name: J-STAR UST
Contract #: 1520
Project #: 1-542-926
Folder #: 1701
Purchase Order:
Arrival Temperature: ON ICE
Report Date: 02/04/2000
Date Received: 01/31/2000

Sample #: 5143 Sample Description: MW-1 Sampled: 01/26/2000

Organic Results

Qualifiers applying to all Analytes of Method 8020: T

Analyte	Result	Units	LOD	LOQ	Dilution	Qualifier	Prep Date	Analyzed Date	Analyst	Method
Benzene	0.53	ug/L	0.10	0.30	1			02/03/2000	JBB	8020
Ethylbenzene	<0.10	ug/L	0.10	0.30	1			02/03/2000	JBB	8020
Methyl tert-butyl ether	<0.10	ug/L	0.10	0.30	1			02/03/2000	JBB	8020
Toluene	<0.10	ug/L	0.10	0.30	1			02/03/2000	JBB	8020
1,2,4-Trimethylbenzene	<0.10	ug/L	0.10	0.30	1			02/03/2000	JBB	8020
1,3,5-Trimethylbenzene	<0.10	ug/L	0.10	0.30	1			02/03/2000	JBB	8020
m & p-Xylene	<0.30	ug/L	0.30	1.0	1			02/03/2000	JBB	8020
o-Xylene	<0.10	ug/L	0.10	0.40	1			02/03/2000	JBB	8020

Sample #: 5144 Sample Description: MW-2 Sampled: 01/26/2000

Organic Results

Benzene	<0.10	ug/L	0.10	0.30	1			02/03/2000	JBB	8020
Ethylbenzene	<0.10	ug/L	0.10	0.30	1			02/03/2000	JBB	8020
Methyl tert-butyl ether	<0.10	ug/L	0.10	0.30	1			02/03/2000	JBB	8020
Toluene	<0.10	ug/L	0.10	0.30	1			02/03/2000	JBB	8020
1,2,4-Trimethylbenzene	<0.10	ug/L	0.10	0.30	1			02/03/2000	JBB	8020
1,3,5-Trimethylbenzene	<0.10	ug/L	0.10	0.30	1			02/03/2000	JBB	8020
m & p-Xylene	<0.30	ug/L	0.30	1.0	1			02/03/2000	JBB	8020
o-Xylene	<0.10	ug/L	0.10	0.40	1			02/03/2000	JBB	8020

Sample #: 5145 Sample Description: MW-3 Sampled: 01/26/2000

Organic Results

Benzene	<0.10	ug/L	0.10	0.30	1			02/03/2000	JBB	8020

WI DNR Lab Certification Number: 157066030
DATCP Certification Number: 289

Solid sample results reported on a Dry Weight Basis

Commonwealth Technology, Inc.

STRAND ASSOCIATES

Project Name: J-STAR UST

Project #: 1-542-926

Contract #: 1520

Folder #: 1701

Analyte	Result	Units	LOD	LOQ	Dilution	Qualifier	Prep Date	Analyzed Date	Analyst	Method
Sample #: 5145	Sample Description:	MW-3						Sampled:	01/26/2000	
Ethylbenzene	<0.10	ug/L	0.10	0.30	1			02/03/2000	JBB	8020
Methyl tert-butyl ether	<0.10	ug/L	0.10	0.30	1			02/03/2000	JBB	8020
Toluene	<0.10	ug/L	0.10	0.30	1			02/03/2000	JBB	8020
1,2,4-Trimethylbenzene	<0.10	ug/L	0.10	0.30	1			02/03/2000	JBB	8020
1,3,5-Trimethylbenzene	<0.10	ug/L	0.10	0.30	1			02/03/2000	JBB	8020
m & p-Xylene	<0.30	ug/L	0.30	1.0	1			02/03/2000	JBB	8020
o-Xylene	<0.10	ug/L	0.10	0.40	1			02/03/2000	JBB	8020
Sample #: 5146	Sample Description:	MW-4						Sampled:	01/26/2000	
Organic Results										
Qualifiers applying to all Analytes of Method 8020: T										
Benzene	<0.10	ug/L	0.10	0.30	1			02/03/2000	JBB	8020
Ethylbenzene	<0.10	ug/L	0.10	0.30	1			02/03/2000	JBB	8020
Methyl tert-butyl ether	<0.10	ug/L	0.10	0.30	1			02/03/2000	JBB	8020
Toluene	11	ug/L	0.10	0.30	1			02/03/2000	JBB	8020
1,2,4-Trimethylbenzene	0.73	ug/L	0.10	0.30	1			02/03/2000	JBB	8020
1,3,5-Trimethylbenzene	<0.10	ug/L	0.10	0.30	1			02/03/2000	JBB	8020
m & p-Xylene	1.1	ug/L	0.30	1.0	1			02/03/2000	JBB	8020
o-Xylene	2.3	ug/L	0.10	0.40	1			02/03/2000	JBB	8020
Sample #: 5147	Sample Description:	P-1						Sampled:	01/26/2000	
Organic Results										
Benzene	2.0	ug/L	0.10	0.30	1			02/03/2000	JBB	8020
Ethylbenzene	5.7	ug/L	0.10	0.30	1			02/03/2000	JBB	8020
Methyl tert-butyl ether	<0.10	ug/L	0.10	0.30	1			02/03/2000	JBB	8020
Toluene	1.6	ug/L	0.10	0.30	1			02/03/2000	JBB	8020
1,2,4-Trimethylbenzene	14	ug/L	0.10	0.30	1			02/03/2000	JBB	8020
1,3,5-Trimethylbenzene	2.4	ug/L	0.10	0.30	1			02/03/2000	JBB	8020
m & p-Xylene	0.98	ug/L	0.30 *	1.0	1			02/03/2000	JBB	8020
o-Xylene	<0.10	ug/L	0.10	0.40	1			02/03/2000	JBB	8020
Sample #: 5148	Sample Description:	BAILER BLANK						Sampled:	01/26/2000	
Organic Results										
Benzene	<0.10	ug/L	0.10	0.30	1			02/03/2000	JBB	8020
Ethylbenzene	<0.10	ug/L	0.10	0.30	1			02/03/2000	JBB	8020
Methyl tert-butyl ether	<0.10	ug/L	0.10	0.30	1			02/03/2000	JBB	8020
Toluene	0.59	ug/L	0.10	0.30	1			02/03/2000	JBB	8020

WI DNR Lab Certification Number: 157066030
DATCP Certification Number: 289

Solid sample results reported on a Dry Weight Basis

Commonwealth Technology, Inc.

STRAND ASSOCIATES

Project Name: J-STAR UST

Project #: 1-542-926

Contract #: 1520
Folder #: 1701

Analyte	Result	Units	LOD	LOQ	Dilution	Qualifier	Prep Date	Analyzed Date	Analyst	Method
Sample #: 5148	Sample Description:	BAILER BLANK						Sampled:	01/26/2000	
1,2,4-Trimethylbenzene	<0.10	ug/L	0.10	0.30	1			02/03/2000	JBB	8020
1,3,5-Trimethylbenzene	<0.10	ug/L	0.10	0.30	1			02/03/2000	JBB	8020
m & p-Xylene	<0.30	ug/L	0.30	1.0	1			02/03/2000	JBB	8020
o-Xylene	<0.10	ug/L	0.10	0.40	1			02/03/2000	JBB	8020
Sample #: 5149	Sample Description:	MW-3 DUP						Sampled:	01/26/2000	
Organic Results										
Benzene	<0.10	ug/L	0.10	0.30	1			02/03/2000	JBB	8020
Ethylbenzene	<0.10	ug/L	0.10	0.30	1			02/03/2000	JBB	8020
Methyl tert-butyl ether	<0.10	ug/L	0.10	0.30	1			02/03/2000	JBB	8020
Toluene	<0.10	ug/L	0.10	0.30	1			02/03/2000	JBB	8020
1,2,4-Trimethylbenzene	<0.10	ug/L	0.10	0.30	1			02/03/2000	JBB	8020
1,3,5-Trimethylbenzene	<0.10	ug/L	0.10	0.30	1			02/03/2000	JBB	8020
m & p-Xylene	<0.30	ug/L	0.30	1.0	1			02/03/2000	JBB	8020
o-Xylene	<0.10	ug/L	0.10	0.40	1			02/03/2000	JBB	8020

Notes: * Indicates Value in between LOD and LOQ.

All samples were received intact and properly preserved unless otherwise noted.
The results reported relate only to the samples tested.
This report shall not be reproduced except in full, without written approval of this laboratory.

Submitted by: _____

Record Reviewer

WI DNR Lab Certification Number: 157066030
DATCP Certification Number: 289

Solid sample results reported on a Dry Weight Basis

QC Qualifiers

Code	Description
B	Analyte detected in associated Method Blank.
E	Safe, No Total Coliform detected.
F	Unsafe, Total Coliform detected, no E. Coli detected.
G	Unsafe, Total Coliform detected and E. Coli detected.
H	Holding time exceeded.
L	Significant peaks were detected outside the chromatographic window.
M	Matrix Spike and/or Matrix Spike Duplicate recovery outside acceptance limits.
N	Insufficient BOD oxygen depletion.
O	Complete BOD oxygen depletion.
P	Toxicity present in BOD sample.
Q	Laboratory Control Sample outside acceptance limits.
S	Surrogate and/or internal standard recovery outside acceptance limits due to apparent matrix effects.
T	Sample received with improper preservation or temperature.
V	Raised Quantitation or Reporting Limit due to limited sample amount or dilution for matrix/background interference.
W	Sample amount received was below program minimum.
Y	Replicate/Duplicate precision outside acceptance limits.
Z	Calibration criteria exceeded.

Commonwealth Technology, Inc.

Formerly the Laboratory Division of Mid-State Associates, Inc.

1-800-228-3012
1230 Lange Court
Baraboo, WI 53913
(608) 356-2760
FAX: (608) 356-2766

2634

Is this a PECFA project? (Please indicate "Yes" or "No") Yes - See annual PECFA Quote

1701

SAMPLE COLLECTOR: Steve Small | COMPANY: Strand | TELEPHONE # (include area code): (608) 251-4843

PROJECT NUMBER: 1-512-926 | PROJECT NAME: JF Star UST

I HEREBY CERTIFY THAT I RECEIVED, PROPERLY HANDLED, AND DISPOSED OF THESE SAMPLES AS NOTED BELOW:

INVOICE ADDRESS (must be completed): Strand - 910 W. Wingra Dr. Madison 53715

REPORT ADDRESS (must be completed): Report: Strand - 910 W. Wingra Drive Madison, WI 53715

DATE & TIME OF RELINQUISHMENT: | RELINQUISHED BY (signature): Steve Small | RECEIVED BY (signature): [illegible] | DATE / TIME OF RECEPTION:

DATE & TIME OF RELINQUISHMENT: | RELINQUISHED BY (signature): | RECEIVED BY LABORATORY (signature): [illegible] | DATE / TIME OF RECEPTION: 1-31-00 1300

FIELD ID NUMBER	DATE COLLECTED	TIME COLLECTED	SAMPLE TYPE	SAMPLE DEVICE	PRESERV. TYPE	LOCATION / DESCRIPTION	TYPE OF ANALYSES REQUIRED (please circle)	LAB USE ONLY PROF. W/MeOH? "X" IF YES	NO./TYPE OF CONTAINERS	LAB I.D.
MW-1	1-26-00	1450	Water		HCl		DRO GRO GRO/PVOC (PVOC) Pb Cd % SOLIDS FLASHPOINT VOC-LUST VOC-8021 SIEVE #200 SIEVE PAINT FILTER PAH Other (please list):		3, 40ml Vials	5143
MW-2	↓	1330	↓	↓	↓		DRO GRO GRO/PVOC (PVOC) Pb Cd % SOLIDS FLASHPOINT VOC-LUST VOC-8021 SIEVE #200 SIEVE PAINT FILTER PAH Other (please list):		↓	5144
MW-3	↓	1400	↓	↓	↓		DRO GRO GRO/PVOC (PVOC) Pb Cd % SOLIDS FLASHPOINT VOC-LUST VOC-8021 SIEVE #200 SIEVE PAINT FILTER PAH Other (please list):		↓	5145
MW-4	↓	1240	↓	↓	↓		DRO GRO GRO/PVOC (PVOC) Pb Cd % SOLIDS FLASHPOINT VOC-LUST VOC-8021 SIEVE #200 SIEVE PAINT FILTER PAH Other (please list):		↓	5146
P-1	↓	1530	↓	↓	↓		DRO GRO GRO/PVOC (PVOC) Pb Cd % SOLIDS FLASHPOINT VOC-LUST VOC-8021 SIEVE #200 SIEVE PAINT FILTER PAH Other (please list):		↓	5147
Bailer Blank	↓	1430	↓	↓	↓		DRO GRO GRO/PVOC (PVOC) Pb Cd % SOLIDS FLASHPOINT VOC-LUST VOC-8021 SIEVE #200 SIEVE PAINT FILTER PAH Other (please list):		↓	5148
MW-3 Dup	↓	1401	↓	↓	↓		DRO GRO GRO/PVOC (PVOC) Pb Cd % SOLIDS FLASHPOINT VOC-LUST VOC-8021 SIEVE #200 SIEVE PAINT FILTER PAH Other (please list):		↓	5149
							DRO GRO GRO/PVOC PVOC Pb Cd % SOLIDS FLASHPOINT VOC-LUST VOC-8021 SIEVE #200 SIEVE PAINT FILTER PAH Other (please list):			

SAMPLE CONDITIONS / COMMENTS:

CHECKED

ARRIVAL TEMPERATURE: on ice

Commonwealth Technology, Inc.

Formerly the Laboratory Division of Mid-State Associates, Inc.

1-800-228-3012
1230 Lange Court
Baraboo, WI 53913
(608) 356-2760
FAX: (608) 356-2766

2634

Is this a PECFA project? (Please indicate "Yes" or "No") Yes – See annual PECFA Quote

1701

SAMPLE COLLECTOR: Steve Small | COMPANY: Strand | TELEPHONE # (include area code): (608) 251-4843

PROJECT NUMBER: 1-542-926 | PROJECT NAME: J-Star UST

I HEREBY CERTIFY THAT I RECEIVED, PROPERLY HANDLED, AND DISPOSED OF THESE SAMPLES AS NOTED BELOW:

INVOICE ADDRESS (must be completed): Strand – 910 W. Wingra Dr., Madison, 53715

REPORT ADDRESS (must be completed): Report: Strand – 910 W. Wingra Drive Madison, WI 53715

DATE & TIME OF RELINQUISHMENT:

RELINQUISHED BY (signature): Steve Small

RECEIVED BY (signature): 276

DATE / TIME OF RECEPTION:

DATE & TIME OF RELINQUISHMENT:

RELINQUISHED BY (signature):

RECEIVED BY LABORATORY (signature):

DATE / TIME OF RECEPTION: 1-31-00 1300

FIELD ID NUMBER	DATE COLLECTED	TIME COLLECTED	SAMPLE TYPE	SAMPLE DEVICE	PRESERV. TYPE	LOCATION / DESCRIPTION	TYPE OF ANALYSES REQUIRED (please circle)	LAB USE ONLY PROF. W/MeOH? "X" IF YES	NO./TYPE OF CONTAINERS	LAB I.D.
MW-1	1-26-00	1450 ~~1310~~	Water		HCl		DRO GRO GRO/PVOC (PVOC) Pb Cd % SOLIDS FLASHPOINT VOC-LUST VOC-8021 SIEVE #200 SIEVE PAINT FILTER PAH Other (please list):		3, 40ml Vials	5143
MW-2	↓	1330	↓		↓		DRO GRO GRO/PVOC (PVOC) Pb Cd % SOLIDS FLASHPOINT VOC-LUST VOC-8021 SIEVE #200 SIEVE PAINT FILTER PAH Other (please list):		↓	5144
MW-3	↓	1400	↓		↓		DRO GRO GRO/PVOC (PVOC) Pb Cd % SOLIDS FLASHPOINT VOC-LUST VOC-8021 SIEVE #200 SIEVE PAINT FILTER PAH Other (please list):		↓	5145
MW-4	↓	1240	↓		↓		DRO GRO GRO/PVOC (PVOC) Pb Cd % SOLIDS FLASHPOINT VOC-LUST VOC-8021 SIEVE #200 SIEVE PAINT FILTER PAH Other (please list):		↓	5146
P-1	↓	1530	↓		↓		DRO GRO GRO/PVOC (PVOC) Pb Cd % SOLIDS FLASHPOINT VOC-LUST VOC-8021 SIEVE #200 SIEVE PAINT FILTER PAH Other (please list):		↓	5147
Bailer Blank	↓	1430	↓		↓		DRO GRO GRO/PVOC (PVOC) Pb Cd % SOLIDS FLASHPOINT VOC-LUST VOC-8021 SIEVE #200 SIEVE PAINT FILTER PAH Other (please list):		↓	5148
MW-3 Dup	↓	1401	↓		↓		DRO GRO GRO/PVOC (PVOC) Pb Cd % SOLIDS FLASHPOINT VOC-LUST VOC-8021 SIEVE #200 SIEVE PAINT FILTER PAH Other (please list):		↓	5149
							DRO GRO GRO/PVOC PVOC Pb Cd % SOLIDS FLASHPOINT VOC-LUST VOC-8021 SIEVE #200 SIEVE PAINT FILTER PAH Other (please list):			

SAMPLE CONDITIONS / COMMENTS:

CHECKED

ARRIVAL TEMPERATURE: on ice