THE SIGMA GROUP
Single Source. Sound Solutions.

September 11, 2014 Project Reference #12530

Ms. Jennifer Borski
Wisconsin Department of Natural Resources
Remediation & Redevelopment Program
625 E. County Road Y, Suite 700
Oshkosh, WI 54901

SUBJECT: **Additional Vapor Sampling Results**
Eagle Flats Development
Riverwalk Place and The Landing
431 and 500 E. Eagle Flats Parkway
Formerly 801 South Lawe Street
Appleton, Wisconsin

Dear Ms. Borski:

The Sigma Group (Sigma) submits this letter describing completed modifications to the constructed vapor mitigation systems and results of follow-up vapor sampling activities at the subject property. Specifically, this letter describes modifications to the constructed vapor mitigation system, details follow-up sampling to evaluate indoor air concentrations following the completed modifications, discusses the results of the completed sampling activities, and provides recommendations based on those results.

A detailed description of the design and construction of the vapor mitigation system incorporated into the redevelopment of the site was previously submitted to the WDNR in the following documents:

- *Request for Grant of Exemption to NR 506 to Construct on Historic Fill Site, Proposed Eagle Flats Development, 801 S. Lawe Street, Appleton, WI* dated January 18, 2011 and prepared by Sigma.

- *Request for Grant of Exemption to NR 500 for Reuse of Low Hazard Waste Material, Proposed Eagle Flats Development, 801 S. Lawe Street, Appleton, WI* dated January 18, 2011 and prepared by Sigma.

Results of initial post-construction vapor sampling of indoor air were reported to the WDNR in March 2013. Based on the initial post-construction sampling results, the passive venting systems installed as part of building construction beneath both the Landing and Riverwalk Place buildings were converted into active venting systems.

VAPOR INTRUSION MITIGATION SYSTEM MODIFICATIONS

In response to the results of the initial post-construction indoor air sampling results, active blower fans were connected to the perforated vent pipes installed within the sub-slab venting layer beneath each of the site buildings. The blower fans were installed to draw air from beneath the basement level floor slab of each building and vent the air through the existing vent system pipes which are open to the atmosphere above the roof level of each building. A Fantech HP2190 in-line fan (spec sheet included in *Attachment A*) was installed at each vent system exhaust location (four exhaust locations per building) to generate as much air flow within the sub-slab venting layer as possible.

The in-line fans were installed were installed and operating by April 23, 2013. Each fan was provided with a direct electrical connection to ensure accidental fan shut-off does not occur. Fans are located above the roof-level of each building; photos of the installed fans are included in *Attachment B*. The system exhaust locations are located at roof-level away from any building air intakes which are located on the sides of the buildings. A u-tube pressure manometer was installed on each vent riser pipe within the basement level of each building to allow monitoring of system performance.

SUB-SLAB COMMUNICATION EVALUATION

Following installation of the blower fans and activation of the mitigation system, an evaluation of potential communication between the sub-slab and indoor air spaces was completed.

A smoke stick that generated a visible non-toxic smoke was utilized to assess the perimeter joint of the basement floor slab, column penetrations, plumbing penetrations, control joints in the basement floor slab and any other potential points of communication between the sub-slab space and the indoor air space within each building. Photos of typical features evaluated using the smoke stick are included in *Attachment B*.

Based on the communication evaluation, the floor slab perimeter joint (between the basement floor slab and exterior wall), the joints between the floor slab and concrete columns within the basement, and the sump covers within each building were identified as likely communication pathways between the sub-slab and interior basement air spaces.

SEALING OF POTENTIAL COMMUNICATION PATHWAYS

Additional sealing of the floor slab perimeter, concrete column joints and sealing of the sump covers within each building was implemented in August 2013. A self-leveling polyurethane sealant caulk was utilized to seal the recommended joints and sealing of the sump covers was also implemented. Photos of the completed sealing work are included in *Attachment B*.

CONFIRMATION INDOOR AIR SAMPLING

Following completion of the venting system activation and communication pathway evaluation and sealing, confirmation samples were collected from the basement level of each building to evaluate the effectiveness of the measures in reducing indoor air concentrations.

Representative samples of the indoor air from both The Landing and Riverwalk Place were collected from within the basement parking level of each building over a 24-hour sampling period using a laboratory certified SUMMA canister between November 4 and 5, 2013. The samples were submitted for laboratory analysis of chlorinated volatile organic compounds (CVOCs) that have been identified in soil and groundwater samples at the site: tetrachloroethene, trichloroethene, cis-1,2-dichloroethene, trans-1,2-dichloroethene, and vinyl chloride.

VAPOR/AIR SAMPLING RESULTS

Vapor Risk Screening Levels (VRSLs) (for passive system samples) and Vapor Action Levels (VALs) (for the indoor basement parking air samples) were calculated for each analyzed compound in accordance with the WDNR's December 2010 Vapor Intrusion Guidance Document. The calculated VRSLS and VALs are based on EPA Region 3 risk based concentrations for Residential Air[1]. In accordance with the December 2010 guidance document, the WDNR VALs used for the ambient air samples were modified to represent an excess cancer risk of 1 in 100,000 (revised from the EPA's factor of 1 in 1,000,000) and the screening levels used for the sub slab vapor samples were further adjusted with an attenuation factor of 0.1 for the sub slab-to-indoor air migration pathway. The VALs and VRSLs, along with laboratory analytical results, are presented in *Table 1*. A copy of the laboratory analytical report is included in *Attachment C*.

Review of the laboratory analytical results indicates concentrations of the analyzed CVOC constituents were reported less than laboratory detection limits within each of the indoor air samples with the exception of the reported concentration of trans-1,2-dichloroethene reported within the sample collected from The Landing. There is no VAL for trans-1,2-dichloroethene to compare the reported concentration within the indoor air sample to.

It should be noted that during the initial (February 2013) air sampling event, trans-1,2-dichloroethene was reported at a higher concentration within the basement level air sample collected at The Landing than within the sample collected from the sub-slab vent system located beneath The Landing; whereas each of the other CVOC constituents was reported at a higher concentration within the sample collected from the sub-slab vent system located beneath The Landing than within the basement level air sample collected at The Landing. These data indicate that the presence of trans-1,2-dichloroethene within the basement level air samples is likely not associated or not entirely associated with the identified soil and groundwater contamination present beneath the site buildings. Whether this is an error at the laboratory or for some other reason, the levels are sufficiently low to make further inquiry moot.

Based on the results of the collected indoor air samples, the vapor intrusion mitigation system has effectively reduced the vapor intrusion risk to The Landing and Riverwalk Place to acceptable levels. An updated Operation and Maintenance Plan for the vapor intrusion mitigation system will be submitted once WDNR approval for the installed mitigation system, as described in this document, is received. Ongoing remediation work implemented by the responsible party for the former Kerwin Paper Mill site will continue to reduce the

[1] http://www.epa.gov/reg3hwmd/risk/human/rb-concentration_table/Generic_Tables/index.htm

mass of contaminant within the site subsurface and further reduce the risk of vapor intrusion over time. The vapor intrusion mitigation systems will be operated and maintained until it can be demonstrated that the risk associated with the vapor intrusion pathway no longer warrants operation of the system.

Please do not hesitate to contact us at (414) 643-4200 with any questions or comments.

Sincerely,

THE SIGMA GROUP, INC.

Stephen Meer, P.E.
Project Engineer

Joshua J. Neudorfer
Senior Consultant

Cc: John Thode, Eagle Flats Apartment Homes, LLC
Debra Dillenberg, Appleton Housing Authority

Attachments

TABLE

Table 1
Subslab Vapor & Indoor Air Quality Results
Eagle Flats - 431 & 500 E. Eagle Flats Parkway, Appleton, Wisconsin
Sigma Project No. 12530

Sample Type:	**Ambient Air Samples**					VAL for Residential Air [2]
Sample Identification:	Basement Air - The Landing		Basement Air - Riverwalk Place		Outdoor Air (control)	
Date:	2/21/13 to 2/22/13	11/4/13 to 11/5/13	2/21/13 to 2/22/13	11/4/13 to 11/5/13	2/21/13 to 2/22/13	
Units:	$\mu g/m^3$	$\mu g/m^3$	$\mu g/m^3$	$\mu g/m^3$	$\mu g/m^3$	$\mu g/m^3$
cis-1,2-Dichloroethene	<1.1	<1.3	<1.7	<1.1	<1.5	NS
trans-1,2-Dichloroethene	9.2	27.8	<1.7	<1.1	<1.5	NS
Tetrachloroethene	0.99	<1.1	**101**	<0.92	<1.3	42
Trichloroethene	0.85	<0.85	**13.9**	<0.74	<1.0	2.1
Vinyl Chloride	<0.35	<0.40	<0.54	<0.35	<0.48	1.7
Sample Type:	**Subslab Vapor Samples**					
Sample Identification:	Subslab Vent System Sample - The Landing		Subslab Vent System Sample - Riverwalk Place			VRSL for Residential Air [3]
Date:	2/21/13 to 2/22/13		2/21/13 to 2/22/13			
Units:	$\mu g/m^3$		$\mu g/m^3$			$\mu g/m^3$
cis-1,2-Dichloroethene	2.9		24.2			NS
trans-1,2-Dichloroethene	6.5		<5.8			NS
Tetrachloroethene	2.5		129			420
Trichloroethene	5.2		**253**			21
Vinyl Chloride	<0.72		<1.9			17

Notes:

1. Units of measurement: $\mu g/m^3$ = micrograms per cubic meter
2. VAL for Residential Air = Vapor Action Level described in WDNR publication PUB-RR-800 "Addressing Vapor Intrusion at Remediation & Redevelopment Sites in Wisconsin" (dated December 2010) which in turn references EPA Region 3 Risk-Based Concentrations for residential air (Regional Screening Level Master Table - May 2014 [http://www.epa.gov/reg3hwmd/risk/human/rb-concentration_table/index.htm]). VAL adjusted to 1-in-100,000 increase in lifetime cancer risk for carcinogens per WDNR publication PUB-RR-800; VAL is not adjusted for non-carcinogens (i.e., harzard index = 1).
3. VRSL for Subslab Vapor to Indoor Air Pathway = Risk-based concentrations based on VALs for residential air (see note #2 above) which has been adjusted with an Attenuation Factor of 0.1 for the subslab to ambient air pathway as provided in WDNR publication PUB-RR-800 "Addressing Vapor Intrusion at Remediation & Redevelopment Sites in Wisconsin" (dated December 2010) for a residential building.
5. Exceedances: **bold** = air / vapor concentration exceeds WDNR VAL or screening level

ATTACHMENT A

Fantech

HP SERIES

FANS FOR RADON APPLICATIONS

WITH IMPROVED UV RESISTANCE!

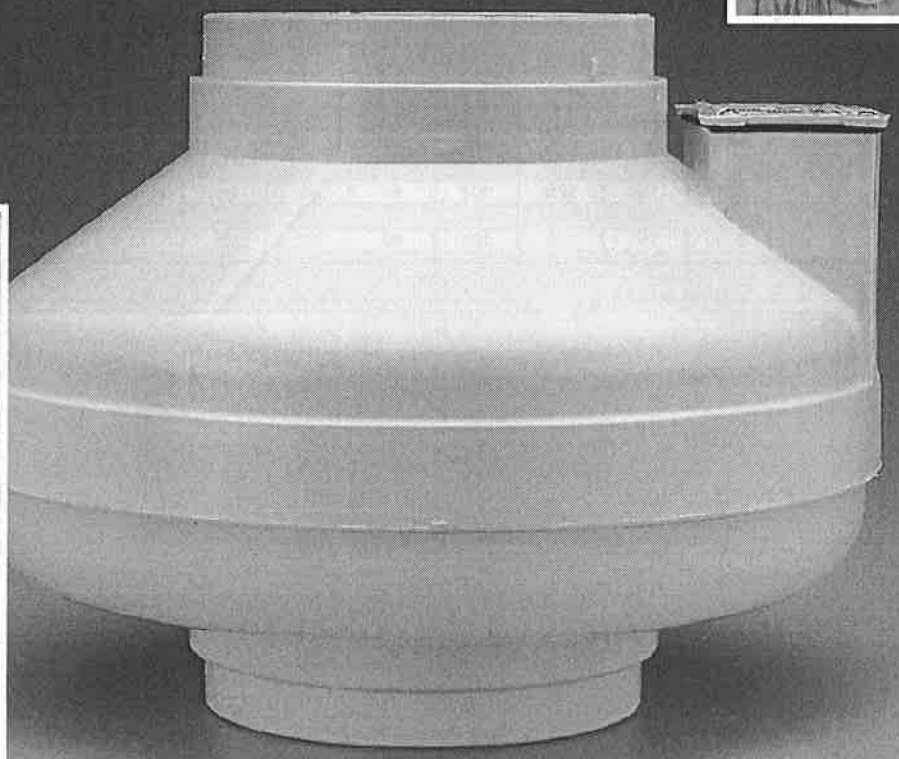

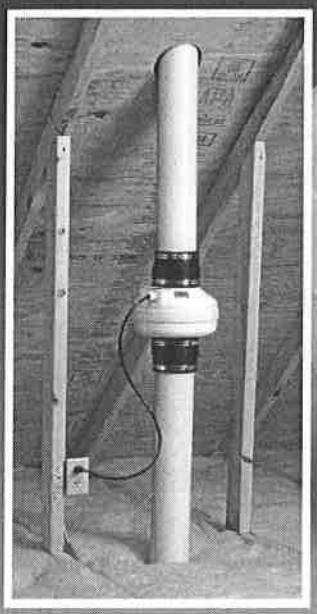

TRUST THE INDUSTRY STANDARD.
HERE'S WHY:

Don't put your reputation at stake by installing a fan you know won't perform like a Fantech! For nearly twenty years, Fantech has manufactured quality ventilation equipment for Radon applications. Fantech is the fan Radon contractors have turned to in over 1,000,000 successful Radon installations worldwide.

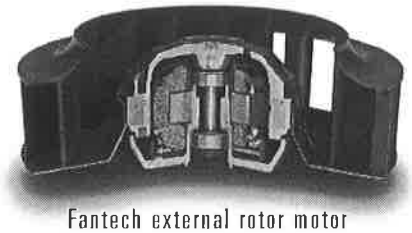

Fantech external rotor motor

FANTECH HP SERIES FANS MEET THE CHALLENGES OF RADON APPLICATIONS:

HOUSING
- UV resistant, UL Listed durable plastic
- UL Listed for use in commercial applications
- Factory sealed to prevent leakage
- Watertight electrical terminal box
- Approved for mounting in wet locations - i.e. Outdoors

MOTOR
- Totally enclosed for protection
- High efficiency EBM motorized impeller
- Automatic reset thermal overload protection
- Average life expectancy of 7-10 years under continuous load conditions

RELIABILITY
- Five Year Full Factory Warranty
- Over 1,000,000 successful radon installations worldwide

IMPROVING INDOOR AIR QUALITY THROUGH BETTER VENTILATION

www.fantech.net

Fantech

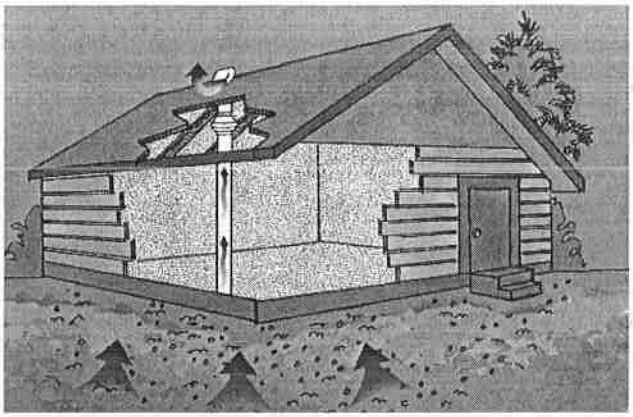

HP Series Fans are Specially Designed with Higher Pressure Capabilities for Radon Mitigation Applications

MOST RADON MITIGATORS WHO PREVIOUSLY USED THE FANTECH FR SERIES FANS HAVE SWITCHED TO THE NEW HP SERIES.

PERFORMANCE DATA

Fan Model	Volts	Wattage Range	Max. Amps	CFM vs. Static Pressure In Inches W.G.								Max. Ps
				0"	0.5"	0.75"	1.0"	1.25"	1.5"	1.75"	2.0"	
HP2133	115	14 - 20	0.17	134	68	19	-	-	-	-	-	0.84
HP2190	115	60 - 85	0.78	163	126	104	81	58	35	15	-	1.93
HP175	115	44 - 65	0.57	151	112	91	70	40	12	-	-	1.66
HP190	115	60 - 85	0.78	157	123	106	89	67	45	18	1	2.01
HP220	115	85 - 152	1.30	344	260	226	193	166	137	102	58	2.46

HVI MEMBER™

PERFORMANCE CURVES

Fantech provides you with independently tested performance specifications.

The performance curves shown in this brochure are representative of the actual test results recorded at Texas Engineering Experiment Station/Energy Systems Lab, a recognized testing authority for HVI. Testing was done in accordance with AMCA Standard 210-85 and HVI 916 Test Procedures. Performance graphs show air flow vs. static pressure.

Use of HP Series fans in low resistance applications such as bathroom venting will result in elevated sound levels. We suggest FR Series or other Fantech fans for such applications.

HP FEATURES INCLUDE

- Improved UV resistant housings approved for commercial applications.
- UL Approved for Wet Locations (Outdoors)
- Sealed housings and wiring boxes to prevent Radon leakage or water penetration
- Energy efficient permanent split capacitor motors
- External wiring box
- Full Five Year Factory Warranty

c UL us

NOTE:
Installations that will result in condensate forming in the outlet ducting should have a condensate bypass installed to route the condensate outside of the fan housing. Conditions that are likely to produce condensate include but are not limited to: outdoor installations in cold climates, long lengths of outlet ducting, high moisture content in soil and thin wall or aluminum outlet ducting. Failure to install a proper condensate bypass may void any warranty claims.

HP2133 & HP2190 RADON MITIGATION FANS

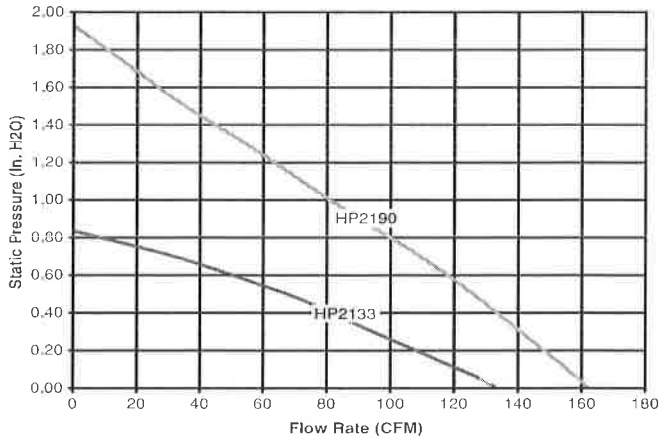

Tested with 4" ID duct and standard couplings.

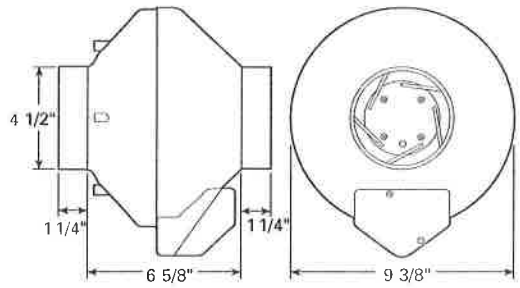

HP2133 – For applications where lower pressure and flow are needed. Record low power consumption of 14-20 watts! Often used where there is good sub slab communication and lower Radon levels.

HP2190 – Performance like the HP190 but in a smaller housing. Performance suitable for the majority of installations.

Fans are attached to PVC pipe using flexible couplings.
For 4" PVC pipe use Indiana Seals #156-44, Pipeconx PCX 56-44 or equivalent.
For 3" PVC pipe use Indiana Seals #156-43, Pipeconx PCX 56-43 or equivalent.

HP175 & HP190 RADON MITIGATION FANS

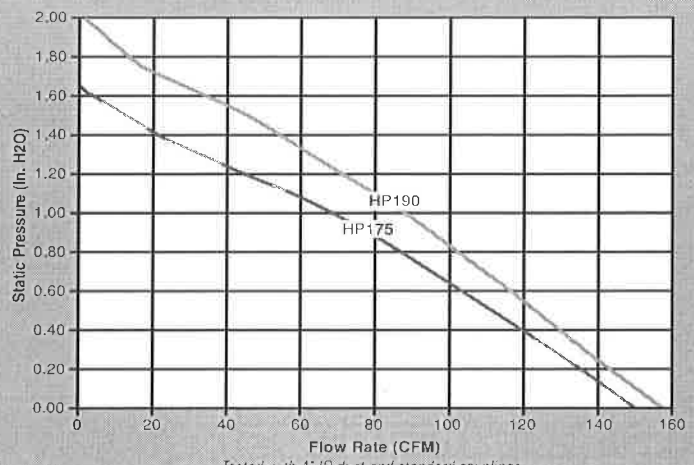

Tested with 4" ID duct and standard couplings

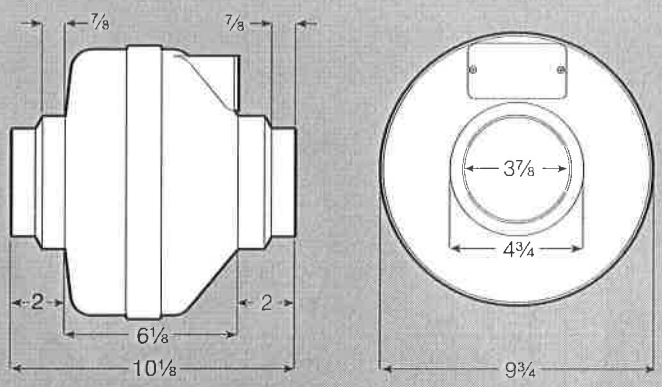

HP175 – The economical choice where slightly less air flow is needed. Often used where there is good sub slab communication and lower Radon levels.

HP190 – The standard for Radon Mitigation. Ideally tailored performance curve for a vast majority of your mitigations.

Fans are attached to PVC pipe using flexible couplings.
For 4" PVC pipe use Indiana Seals #151-44, Pipeconx PCX 51-44 or equivalent.
For 3" PVC pipe use Indiana Seals #156-43, Pipeconx PCX 56-43 or equivalent.

HP220 RADON MITIGATION FAN

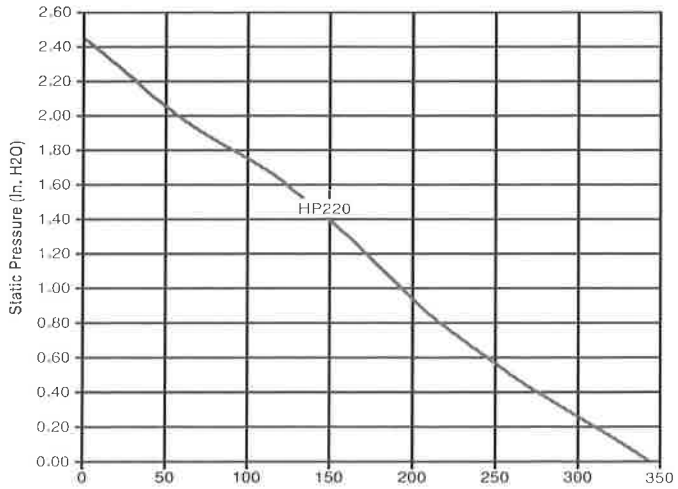

Tested with 6" ID duct and standard couplings.

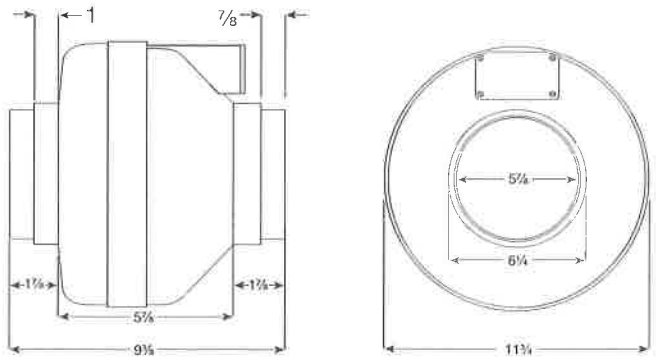

HP 220 – Excellent choice for systems with elevated radon levels, poor communication, multiple suction points and large subslab footprint. Replaces FR 175.

Fans are attached to PVC pipe using flexible couplings.
For 4" PVC pipe use Indiana Seals #156-64, Pipeconx PCX 56-64 or equivalent.
For 3" PVC pipe use Indiana Seals #156-63, Pipeconx PCX 56-63 or equivalent.

Fantech

FR SERIES

THE ORIGINAL MITIGATOR

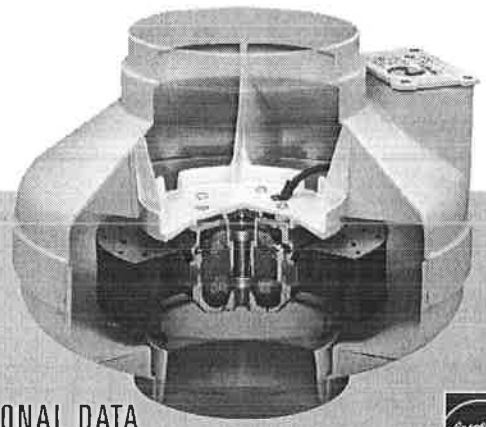

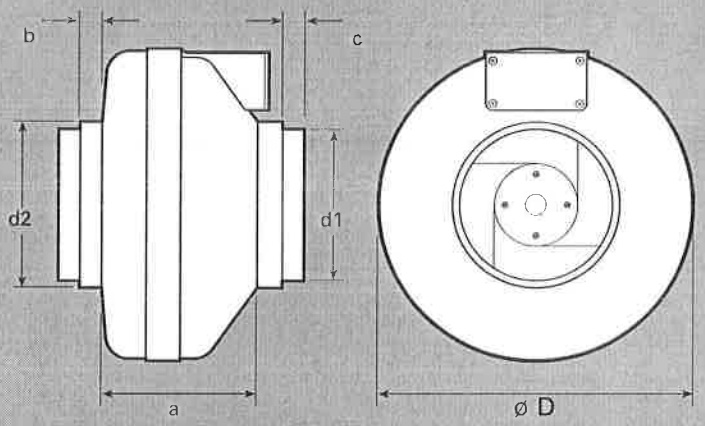

DIMENSIONAL DATA

model	øD	d1	d2	a	b	c
FR100	9 1/2	3 7/8	4 7/8	6 1/8	7/8	7/8
FR110	9 1/2	3 7/8	4 7/8	6 1/8	7/8	7/8
FR125	9 1/2	–	4 7/8	6 1/8	7/8	–
FR140	11 3/4	5 7/8	6 1/4	5 7/8	1	7/8
FR150	11 3/4	5 7/8	6 1/4	5 7/8	1	7/8
FR160	11 3/4	5 7/8	6 1/4	6 3/8	1	7/8
FR200	13 1/4	7 7/8	9 7/8	6 1/4	1 1/2	1 1/2
FR225	13 1/4	7 7/8	9 7/8	6 1/4	1 1/2	1 1/2
FR250	13 1/4	–	9 7/8	6 1/4	–	1 1/2

All dimensions in inches

PERFORMANCE DATA

Fan Model	Energy Star	RPM	Volts	Rated Watts	Wattage Range	Max. Amps	CFM vs. Static Pressure in Inches W.G.							Max. Ps	Duct Dia.
							0"	.2"	.4"	.6"	.8"	1.0"	1.5"		
FR100	✓	2950	120	21.2	13 - 22	0.18	137	110	83	60	21	-	-	0.90"	4"
FR125	✓	2950	115	18	15 - 18	0.18	148	120	88	47	-	-	-	0.79"	5"
FR150	✓	2750	120	71	54 - 72	0.67	263	230	198	167	136	106	17	1.58"	6"
FR160	-	2750	115	129	103 - 130	1.14	289	260	233	206	179	154	89	2.32"	6"
FR200	✓	2750	115	122	106 - 128	1.11	408	360	308	259	213	173	72	2.14"	8"
FR225	✓	3100	115	137	111 - 152	1.35	429	400	366	332	297	260	168	2.48"	8"
FR250*	-	2850	115	241	146 - 248	2.40	649	600	553	506	454	403	294	2.58"	10"

FR Series performance is shown with ducted outlet. Per HVI's Certified Ratings Program, charted air flow performance has been derated by a factor based on actual test results and the certified rate at .2 inches WG.
** Also available with 8" duct connection. Model FR 250-8. Special Order.*

NOTE:

Installations that will result in condensate forming in the outlet ducting should have a condensate bypass installed to route the condensate outside of the fan housing. Conditions that are likely to produce condensate include but are not limited to: outdoor installations in cold climates, long lengths of outlet ducting, high moisture content in soil and thin wall or aluminum outlet ducting. Failure to install a proper condensate bypass may void any warranty claims.

FIVE YEAR WARRANTY

DURING ENTIRE WARRANTY PERIOD:

FANTECH will replace any fan which has a factory defect in workmanship or material. Product may need to be returned to the Fantech factory, together with a copy of the bill of sale and identified with RMA number.

FOR FACTORY RETURN YOU MUST:

- Have a Return Materials Authorization (RMA) number. This may be obtained by calling FANTECH either in the USA at 1.800.747.1762 or in CANADA at 1.800.565.3548. Please have bill of sale available.
- The RMA number must be clearly written on the outside of the carton, or the carton will be refused.
- All parts and/or product will be repaired/replaced and shipped back to buyer; no credit will be issued.

OR

The Distributor may place an order for the warranty fan and is invoiced.
The Distributor will receive a credit equal to the invoice only after product is returned prepaid and verified to be defective.

FANTECH WARRANTY TERMS DO NOT PROVIDE FOR REPLACEMENT WITHOUT CHARGE PRIOR TO INSPECTION FOR A DEFECT. REPLACEMENTS ISSUED IN ADVANCE OF DEFECT INSPECTION ARE INVOICED, AND CREDIT IS PENDING INSPECTION OF RETURNED MATERIAL. DEFECTIVE MATERIAL RETURNED BY END USERS SHOULD NOT BE REPLACED BY THE DISTRIBUTOR WITHOUT CHARGE TO THE END USER, AS CREDIT TO DISTRIBUTOR'S ACCOUNT WILL BE PENDING INSPECTION AND VERIFICATION OF ACTUAL DEFECT BY FANTECH.

THE FOLLOWING WARRANTIES DO NOT APPLY:

- Damages from shipping, either concealed or visible. Claim must be filed with freight company.
- Damages resulting from improper wiring or installation.
- Damages or failure caused by acts of God, or resulting from improper consumer procedures, such as:

1. Improper maintenance
2. Misuse, abuse, abnormal use, or accident, and
3. Incorrect electrical voltage or current.

- Removal or any alteration made on the FANTECH label control number or date of manufacture.
- Any other warranty, expressed, implied or written, and to any consequential or incidental damages, loss of property, revenues, or profit, or costs of removal, installation or reinstallation, for any breach of warranty.

WARRANTY VALIDATION

- The user must keep a copy of the bill of sale to verify purchase date.
- These warranties give you specific legal rights, and are subject to an applicable consumer protection legislation. You may have additional rights which vary from state to state.

DISTRIBUTED BY:

Fantech

United States 10048 Industrial Blvd. • Lenexa, KS 66215 • 1.800.747.1762 • www.fantech.net
Canada 50 Kanaflaki Way • Bouctouche, NB E4S 3M5 • 1.800.565.3548 • www.fantech.net

Item #: 411741
Rev Date: 021010

Fantech, reserves the right to modify, at any time and without notice, any or all of its products' features, designs, components and specifications to maintain their technological leadership position.

ATTACHMENT B

THE SIGMA GROUP
Single Source. Sound Solutions.

Photo Page 1

Photo 1: Installed radon fan.

Photo 2: Roof top exhaust location for sub-slab venting system.

ADDRESS: Eagle Flats Development

Eagle Flats Parkway, Appleton, WI **Sigma Project Number: 12530**

THE SIGMA GROUP
Single Source. Sound Solutions.

Photo Page 2

Photo 3: Roof top exhaust location.

Photo 4: Floor joint (possible communication point).

ADDRESS: Eagle Flats Development

Eagle Flats Parkway, Appleton, WI **Sigma Project Number: 12530**

THE SIGMA GROUP
Single Source. Sound Solutions.

Photo Page 3

Photo 5: Floor joint (possible communication point).

Photo 6: Sump cover (pre-sealing).

ADDRESS: Eagle Flats Development

Eagle Flats Parkway, Appleton, WI **Sigma Project Number: 12530**

Photo Page 4

Photo 7: Perimeter floor joint (following sealing).

Photo 8: Perimeter floor joint (following sealing).

ADDRESS: Eagle Flats Development

Eagle Flats Parkway, Appleton, WI **Sigma Project Number: 12530**

Photo 9: Floor/column joint (following sealing).

Photo 10: Sump cover (following sealing).

ATTACHMENT C

Pace Analytical Services, Inc.
1700 Elm Street - Suite 200
Minneapolis, MN 55414
(612)607-1700

November 21, 2013

Steve Meer
Sigma Environmental Services
1300 W. Canal St.
Milwaukee, WI 53233

RE: Project: 12530 E. FLATS
Pace Project No.: 10248522

Dear Steve Meer:
Enclosed are the analytical results for sample(s) received by the laboratory on November 07, 2013. The results relate only to the samples included in this report. Results reported herein conform to the most current TNI standards and the laboratory's Quality Assurance Manual, where applicable, unless otherwise noted in the body of the report.

If you have any questions concerning this report, please feel free to contact me.

Sincerely,

Carolynne Trout

Carolynne Trout

carolynne.trout@pacelabs.com
Project Manager

Enclosures

This report shall not be reproduced, except in full,
without the written consent of Pace Analytical Services, Inc.

Pace Analytical Services, Inc.
1700 Elm Street - Suite 200
Minneapolis, MN 55414
(612)607-1700

CERTIFICATIONS

Project: 12530 E. FLATS
Pace Project No.: 10248522

Minnesota Certification IDs
1700 Elm Street SE Suite 200, Minneapolis, MN 55414
A2LA Certification #: 2926.01
Alabama Dept of Environmental Management #40770
Alaska Certification #: UST-078
Alaska Certification #MN00064
Arizona Certification #: AZ-0014
Arkansas Certification #: 88-0680
California Certification #: 01155CA
Colorado Certification #Pace
Connecticut Certification #: PH-0256
EPA Region 5 #WD-15J
EPA Region 8 Certification #: Pace
Florida/NELAP Certification #: E87605
Georgia Certification #: 959
Hawaii Certification #Pace
Idaho Certification #: MN00064
Illinois Certification #: 200011
Indiana Certification#C-MN-01
Iowa Certification #: 368
Kansas Certification #: E-10167
Kentucky Dept of Envi. Protection - DW #90062
Louisiana Certification #: 03086
Louisiana Certification #: LA080009
Maine Certification #: 2007029
Maryland Certification #: 322
Michigan DEQ Certification #: 9909
Minnesota Certification #: 027-053-137
Mississippi Certification #: Pace
Montana Certification #: MT CERT0092
Nevada Certification #: MN_00064
Nebraska Certification #: Pace
New Jersey Certification #: MN-002
New York Certification #: 11647
North Carolina Certification #: 530
North Dakota Certification #: R-036
Ohio VAP Certification #: CL101
Oklahoma Certification #: 9507
Oregon Certification #: MN200001
Oregon Certification #: MN300001
Pennsylvania Certification #: 68-00563
Puerto Rico Certification
Tennessee Certification #: 02818
Texas Certification #: T104704192
Utah Certification #: MN00064
Virginia/DCLS Certification #: 002521
Virginia/VELAP Certification #: 460163
Washington Certification #: C754
West Virginia Certification #: 382
Wisconsin Certification #: 999407970

This report shall not be reproduced, except in full,
without the written consent of Pace Analytical Services, Inc.

Pace Analytical Services, Inc.
1700 Elm Street - Suite 200
Minneapolis, MN 55414
(612)607-1700

SAMPLE SUMMARY

Project: 12530 E. FLATS
Pace Project No.: 10248522

Lab ID	Sample ID	Matrix	Date Collected	Date Received
10248522001	**RW BASE-2**	Air	11/05/13 11:23	11/07/13 11:50
10248522002	**LND BASE-2**	Air	11/05/13 11:32	11/07/13 11:50

This report shall not be reproduced, except in full,
without the written consent of Pace Analytical Services, Inc.

Pace Analytical Services, Inc.
1700 Elm Street - Suite 200
Minneapolis, MN 55414
(612)607-1700

SAMPLE ANALYTE COUNT

Project: 12530 E. FLATS
Pace Project No.: 10248522

Lab ID	Sample ID	Method	Analysts	Analytes Reported
10248522001	**RW BASE-2**	TO-15	DR1	5
10248522002	**LND BASE-2**	TO-15	DR1	5

This report shall not be reproduced, except in full,
without the written consent of Pace Analytical Services, Inc.

Pace Analytical Services, Inc.
1700 Elm Street - Suite 200
Minneapolis, MN 55414
(612)607-1700

ANALYTICAL RESULTS

Project: 12530 E. FLATS
Pace Project No.: 10248522

Sample: RW BASE-2 **Lab ID: 10248522001** Collected: 11/05/13 11:23 Received: 11/07/13 11:50 Matrix: Air

Parameters	Results	Units	Report Limit	DF	Prepared	Analyzed	CAS No.	Qual
TO15 MSV AIR	Analytical Method: TO-15							
cis-1,2-Dichloroethene	ND	ug/m3	1.1	1.34		11/19/13 23:00	156-59-2	
trans-1,2-Dichloroethene	ND	ug/m3	1.1	1.34		11/19/13 23:00	156-60-5	
Tetrachloroethene	ND	ug/m3	0.92	1.34		11/19/13 23:00	127-18-4	
Trichloroethene	ND	ug/m3	0.74	1.34		11/19/13 23:00	79-01-6	
Vinyl chloride	ND	ug/m3	0.35	1.34		11/19/13 23:00	75-01-4	

This report shall not be reproduced, except in full,
without the written consent of Pace Analytical Services, Inc.

Pace Analytical Services, Inc.
1700 Elm Street - Suite 200
Minneapolis, MN 55414
(612)607-1700

ANALYTICAL RESULTS

Project: 12530 E. FLATS
Pace Project No.: 10248522

Sample: LND BASE-2 **Lab ID: 10248522002** Collected: 11/05/13 11:32 Received: 11/07/13 11:50 Matrix: Air

Parameters	Results	Units	Report Limit	DF	Prepared	Analyzed	CAS No.	Qual
TO15 MSV AIR	Analytical Method: TO-15							
cis-1,2-Dichloroethene	ND	ug/m3	1.3	1.55		11/19/13 23:29	156-59-2	
trans-1,2-Dichloroethene	**27.8**	ug/m3	1.3	1.55		11/19/13 23:29	156-60-5	
Tetrachloroethene	ND	ug/m3	1.1	1.55		11/19/13 23:29	127-18-4	
Trichloroethene	ND	ug/m3	0.85	1.55		11/19/13 23:29	79-01-6	
Vinyl chloride	ND	ug/m3	0.40	1.55		11/19/13 23:29	75-01-4	

This report shall not be reproduced, except in full,
without the written consent of Pace Analytical Services, Inc.

Pace Analytical Services, Inc.
1700 Elm Street - Suite 200
Minneapolis, MN 55414
(612)607-1700

QUALITY CONTROL DATA

Project: 12530 E. FLATS
Pace Project No.: 10248522

QC Batch: AIR/18742 | Analysis Method: TO-15
QC Batch Method: TO-15 | Analysis Description: TO15 MSV AIR Low Level
Associated Lab Samples: 10248522001, 10248522002

METHOD BLANK: 1580229 | Matrix: Air
Associated Lab Samples: 10248522001, 10248522002

Parameter	Units	Blank Result	Reporting Limit	Analyzed	Qualifiers
cis-1,2-Dichloroethene	ug/m3	ND	0.81	11/19/13 15:21	
Tetrachloroethene	ug/m3	ND	0.69	11/19/13 15:21	
trans-1,2-Dichloroethene	ug/m3	ND	0.81	11/19/13 15:21	
Trichloroethene	ug/m3	ND	0.55	11/19/13 15:21	
Vinyl chloride	ug/m3	ND	0.26	11/19/13 15:21	

LABORATORY CONTROL SAMPLE: 1580230

Parameter	Units	Spike Conc.	LCS Result	LCS % Rec	% Rec Limits	Qualifiers
cis-1,2-Dichloroethene	ug/m3	40.3	42.8	106	73-135	
Tetrachloroethene	ug/m3	69	64.7	94	66-135	
trans-1,2-Dichloroethene	ug/m3	40.3	42.6	106	68-129	
Trichloroethene	ug/m3	54.6	53.0	97	68-134	
Vinyl chloride	ug/m3	26	25.0	96	64-134	

SAMPLE DUPLICATE: 1582003

Parameter	Units	10249993001 Result	Dup Result	RPD	Max RPD	Qualifiers
cis-1,2-Dichloroethene	ug/m3	ND	ND		25	
Tetrachloroethene	ug/m3	4.2	ND		25	
trans-1,2-Dichloroethene	ug/m3	ND	ND		25	
Trichloroethene	ug/m3	ND	ND		25	
Vinyl chloride	ug/m3	ND	ND		25	

This report shall not be reproduced, except in full,
without the written consent of Pace Analytical Services, Inc.

Pace Analytical Services, Inc.
1700 Elm Street - Suite 200
Minneapolis, MN 55414
(612)607-1700

QUALIFIERS

Project: 12530 E. FLATS
Pace Project No.: 10248522

DEFINITIONS

DF - Dilution Factor, if reported, represents the factor applied to the reported data due to changes in sample preparation, dilution of the sample aliquot, or moisture content.

ND - Not Detected at or above adjusted reporting limit.

J - Estimated concentration above the adjusted method detection limit and below the adjusted reporting limit.

MDL - Adjusted Method Detection Limit.

PRL - Pace Reporting Limit.

RL - Reporting Limit.

S - Surrogate

1,2-Diphenylhydrazine (8270 listed analyte) decomposes to Azobenzene.

Consistent with EPA guidelines, unrounded data are displayed and have been used to calculate % recovery and RPD values.

LCS(D) - Laboratory Control Sample (Duplicate)

MS(D) - Matrix Spike (Duplicate)

DUP - Sample Duplicate

RPD - Relative Percent Difference

NC - Not Calculable.

SG - Silica Gel - Clean-Up

U - Indicates the compound was analyzed for, but not detected.

N-Nitrosodiphenylamine decomposes and cannot be separated from Diphenylamine using Method 8270. The result reported for each analyte is a combined concentration.

Pace Analytical is TNI accredited. Contact your Pace PM for the current list of accredited analytes.

TNI - The NELAC Institute.

This report shall not be reproduced, except in full,
without the written consent of Pace Analytical Services, Inc.

Pace Analytical Services, Inc.
1700 Elm Street - Suite 200
Minneapolis, MN 55414
(612)607-1700

QUALITY CONTROL DATA CROSS REFERENCE TABLE

Project: 12530 E. FLATS
Pace Project No.: 10248522

Lab ID	Sample ID	QC Batch Method	QC Batch	Analytical Method	Analytical Batch
10248522001	**RW BASE-2**	TO-15	AIR/18742		
10248522002	**LND BASE-2**	TO-15	AIR/18742		

This report shall not be reproduced, except in full,
without the written consent of Pace Analytical Services, Inc.

10248522

Pace Analytical®
www.pacelabs.com

AIR: CHAIN-OF-CUSTODY / Analytical Request Document

The Chain-of-Custody is a LEGAL DOCUMENT. All relevant fields must be completed accurately.

12580 Page: 1 of 1

Section A Required Client Information:	Section B Required Project Information:	Section C: Invoice Information:
Company: The Sigma Group	Report To: Steve Meer	Attention: Same
Address: 1300 W. Canal St, Milwaukee, WI 53233	Copy To:	Company Name:
		Address:
Email To: smeer@thesigmagroup.com	Purchase Order No.:	Pace Quote Reference:
Phone: 414-643-4200 Fax: 414-643-4210	Project Name: E. Flats	Pace Project Manager/Sales Rep.
Requested Due Date/TAT: Standard	Project Number: 12530	Pace Profile #:

Program: ☐ UST ☐ Superfund ☐ Emissions ☐ Clean Air Act ☐ Voluntary Clean Up ☐ Dry Clean ☐ RCRA ☐ Other____

Location of Sampling by State: WI

Reporting Units: ug/m³ X mg/m³ ___ PPBV ___ PPMV ___ Other ___

Report Level II.___ III.___ IV.___ Other____

Method: PM10, 3C-Fixed Gas (%), TO-3, TO-3M (Methane), TO-4 (PCBs), TO-13 (PAH), TO-14, TO-15, TO15 Short List*

Valid Media Codes: Tedlar Bag TB; 1 Liter Summa Can 1LC; 6 Liter Summa Can 6LC; Low Volume Puff LVP; High Volume Puff HVP; Other PM10

ITEM #	*Section D Required Client Information AIR SAMPLE ID (Sample IDs MUST BE UNIQUE)	MEDIA CODE	PID Reading (Client only)	COLLECTED COMPOSITE START END/GRAB DATE	TIME	COMPOSITE END DATE	TIME	Canister Pressure (Initial Field - psig)	Canister Pressure (Final Field - psig)	Summa Can Number	Flow Control Number	PM10	3C-Fixed Gas (%)	TO-3	TO-3M (Methane)	TO-4 (PCBs)	TO-13 (PAH)	TO-14	TO-15	TO15 Short List*	Pace Lab ID
1	RW BASE-2	6LC	–	11/4	12:37	11/5	11:23	-29	0	1118	0219								X		881
2	LND BASE-2	6LC	–	11/4	12:54	11/5	11:32	-32	-5	9167	0395								X		882
3											0301										
4																					
5																					
6																					
7																					
8																					
9																					
10																					
11																					
12																					

Comments: Short list compounds for analysis: PCE, TCE, cis/1,2-DCE, trans-1,2-DCE vinyl chloride

RELINQUISHED BY / AFFILIATION	DATE	TIME	ACCEPTED BY / AFFILIATION	DATE	TIME
[signature] / Sigma	11/5	2:30	[signature] Pace	11/7/13	11:56

SAMPLE CONDITIONS: AMB (Y/N) (Y/N) (Y/N)

Temp in °C	Received on Ice Y/N	Custody Sealed Cooler Y/N	Samples Intact Y/N

SAMPLER NAME AND SIGNATURE
PRINT Name of SAMPLER: Steve Meer
SIGNATURE of SAMPLER: [signature] DATE Signed (MM/DD/YY): 11/05/13

ORIGINAL

Pace Analytical	Document Name: Air Sample Condition Upon Receipt	Document Revised: 19Sep2013 Page 1 of 1
	Document No.: F-MN-A-106-rev.08	Issuing Authority: Pace Minnesota Quality Office

Air Sample Condition Upon Receipt

Client Name: the Sigma group

Project #: WO# : 10248522

10248522

Courier: ☑ Fed Ex ☐ UPS ☐ USPS ☐ Client ☐ Commercial ☐ Pace ☐ Other: _____

Tracking Number: 0388360 3053351L

Custody Seal on Cooler/Box Present? ☐ Yes ☑ No **Seals Intact?** ☐ Yes ☑ No

Optional: Proj. Due Date: Proj. Name:

Packing Material: ☐ Bubble Wrap ☐ Bubble Bags ☑ Foam ☐ None ☐ Other: _____

Temp. (TO17 and TO13 samples only) (°C): ____ **Corrected Temp (°C):** ____ **Thermom. Used:** ☐ B88A912167504 ☐ B88A9132521491 ☐ 72337080 ☐ 80512447

Temp should be above freezing to 6°C **Correction Factor:** _____ **Date & Initials of Person Examining Contents:** 11/7/13

				Comments:
Chain of Custody Present?	☑ Yes	☐ No	☐ N/A	1.
Chain of Custody Filled Out?	☑ Yes	☐ No	☐ N/A	2.
Chain of Custody Relinquished?	☑ Yes	☐ No	☐ N/A	3.
Sampler Name and/or Signature on COC?	☑ Yes	☐ No	☐ N/A	4.
Samples Arrived within Hold Time?	☑ Yes	☐ No	☐ N/A	5.
Short Hold Time Analysis (<72 hr)?	☐ Yes	☑ No	☐ N/A	6.
Rush Turn Around Time Requested?	☐ Yes	☑ No	☐ N/A	7.
Sufficient Volume?	☑ Yes	☐ No	☐ N/A	8.
Correct Containers Used?	☑ Yes	☐ No	☐ N/A	9.
-Pace Containers Used?	☑ Yes	☐ No	☐ N/A	
Containers Intact?	☑ Yes	☐ No	☐ N/A	10.
Media: air can				11.
Sample Labels Match COC?	☑ Yes	☐ No	☐ N/A	12.

Samples Received:

Canisters		Flow Controllers		Stand Alone G	
Sample Number	Can ID	Sample Number	Can ID	Sample Number	Can ID
MW	0118		0219		
LND	0467		0349		

CLIENT NOTIFICATION/RESOLUTION **Field Data Required?** ☐ Yes ☐ No

Person Contacted: _____ Date/Time: _____

Comments/Resolution: _____

Project Manager Review: CDmt **Date:** 11/13/13

Note: Whenever there is a discrepancy affecting North Carolina compliance samples, a copy of this form will be sent to the North Carolina DEHNR Certification Office (i.e out of hold, incorrect preservative, out of temp, incorrect containers)