ENVIRONMENTAL
AUDITS INC.

March 22, 1993

Mr. Jim Schmidt
Department of Natural Resources
2300 N. Dr. Martin Luther King, Jr. Drive
P.O. Box 12436
Milwaukee, WI 53212

Dear Mr. Schmidt:

Enclosed please find two (2) copies of a report titled " Phase I Fourth Round Monitoring Results Broach Pit Machine #2525". This report details the results of a fourth round of monitoring about the perimeter of a broach pit located at Twin Disc, Inc. 4600 21st Street, Racine, WI 53405.

Should you have any questions or need further information, please do not hesitate to call.

Sincerely,

Edwin E. Raymond

Edwin E. Raymond

cc: Mr. David Bauer - Twin Disc, Inc.

encl.

1100 COMMERCE DRIVE, RACINE, WI 53406
414.886.6195 414.886.6196 (FAX)

ENVIRONMENTAL AUDITS INC.

PHASE I
FOURTH ROUND MONITORING RESULTS
BROACH PIT MACHINE #2525

SUBJECT PROPERTY
Twin Disc, Inc.
4600 21st Street
Racine, WI 53405

March 17, 1993

Prepared by:

Edwin E. Raymond

Edwin E. Raymond
Environmental Audits, Inc.

1100 COMMERCE DRIVE, RACINE, WI 53406
414.886.6195 414.886.6196 (FAX)

## Preface

Environmental Audits, Inc. (EA) has exercised reasonable efforts to accomplish the required tasks for this Fourth Round Monitoring Results Broach Pit Machine #2525. EA has employed the professional standards applicable to the environmental consulting field today.

The information generated by this Fourth Round Monitoring Results Broach Pit Machine #2525 has been evaluated to establish the probability and extent of site contamination and to determine the need for additional site investigation. This work was accomplished within time and budget limitations. More definitive conclusions may be desired than are warranted by the facts available under these constraints. The conclusions stated in this report are intended for guidance.

WE MAKE NO WARRANTIES, EXPRESS OR IMPLIED, INCLUDING WITHOUT LIMITATION WARRANTIES AS TO MERCHANTABILITY OR FITNESS FOR A PARTICULAR PURPOSE. Further, the information provided in this report is not to be construed as legal advice or a recommendation as to a course of action unless explicitly stated.

## ABSTRACT

The purpose of this report is to summarize the additional investigation involved with the subsurface contamination resulting from an oil/solvent leak through the Twin Disc, Incorporated machine #2525 Broach Pit retaining wall. This leakage occurred over an unknown period of time but was first noticed on August 8, 1990.

On July 9, 1991, Environmental Audits, Inc. provided a copy of the report entitled Phase I Remedial Investigation Summary Report to the WDNR. On February 7, 1992, Environmental Audits, Inc. provided a copy of the report entitled Phase I Second Stage Evaluation Report Broach Pit Machine #2525 to the WDNR. On May 28, 1992, Environmental Audits, Inc. provided a copy of the report entitled Second Round Monitoring Results Broach Pit Machine #2525 to the WDNR. On November 13, 1992, Environmental Audits, Inc. provided a copy of the report entitled Third Round Monitoring Results Broach Pit Machine #2525 to the WDNR. These documents summarized the previous investigative activities and are incorporated into this document by reference.

This document deals with the results of the fourth round of monitoring the groundwater wells installed by Exploration Technology, Incorporated during the period July 31, 1991 through August 2, 1991.

## INTRODUCTION

The initial investigation, detailed in the Phase I Remedial Investigation Summary Report, did not define the degree and extent of the subsurface contamination in either the vertical or horizontal zones. Consequently, Exploration Technology, Incorporated obtained six (6) additional soil borings and installed groundwater monitoring wells in two (2) of the borings. These additional borings and groundwater monitoring wells were obtained or installed between July 31, 1991 and August 2, 1991. The report entitled Phase I Second Stage Evaluation Report Broach Pit Machine #2525 summarized these further investigative activities and the analytical results obtained.

This report deals with the results obtained from a fourth round of sampling of four (4) monitoring wells, MW-9, MW-10, MW-11, and MW-12. An additional well, MW-1, was sampled for the third time. These wells were chosen for resampling due to their location on the outer investigative perimeter and are thought to be better indicators of any contaminate migration occurring than those located closer to the source.

Groundwater monitoring wells were developed in accordance to the procedures detailed in NR 141. MW-1, MW-9, MW-10, MW-11 and MW-12 were developed by purging until dry during the period from December 3, 1992 to December 8, 1992. Sampling occurred on December 9 and December 16, 1992. Groundwater monitoring well samples obtained for laboratory analysis were placed in appropriate pre-weighed sample containers immediately after being collected. Groundwater monitoring well samples were cooled to 4 degrees Celsius by placing the samples in a container and surrounding them with ice. Groundwater monitoring well sample containers were filled to the maximum extent possible to reduce headspace and the possible loss of volatile hydrocarbons. All VOC or PVOC samples were preserved with a 1:1 addition of hydrochloric acid. Total Organic Halogen (TOX) samples were preserved with an addition of sulfuric acid.

Groundwater monitoring well samples were transported to Precision Analytical Laboratory, Inc. and analyzed for PVOC Water, Method 8020, TRPH, and Total Organic Halogens (TOX). Please see Appendix II for groundwater monitoring well sample Chain of Custodies.

## TEST RESULTS

Groundwater monitoring wells MW-1, MW-9, MW-10, MW-11, and MW-12 were resampled on December 9, 1992 and December 16, 1992. Samples were obtained only after these wells were purged dry and allowed to recover twice. MW-11 and MW-12 were originally numbered MW-1 and MW-2 in the Phase I Second Stage Evaluation Report Broach Pit Machine #2525, dated February 7, 1992. A map showing the location of the monitoring wells and numbering system used is included as Appendix I. The results that follow are of the groundwater samples obtained 12/9/92 and 12/16/92. Results from prior sampling events are shown to the right of the current results. The first sampling event is identified as No. 1, the second is identified as No. 2, the third event is identified as No.3, and the fourth event is identified as No.4. No.1 refers to the sampling event of January 4, 1991, Precision Analytical Labs Order # 91-01-023 or the sampling event of September 23, 1991, Precision Analytical Labs Order # 91-09-200. No. 2 refers to sampling event of March 5, 1992, Precision Analytical Labs Order # 92-03-060. No. 3 refers to the sampling event of August 13 and 20, 1992, Precision Analytical Labs Order # 92-08-162 and # 92-08-247. No. 4 refers to the sampling event of December 9, 1992 and December 16, 1992, Precision Analytical Labs Order # 9212124 and # 9212192.

Groundwater Well MW-1

| Test Description | No. 4 | No. 3 | No. 1 | Units |
|---|---|---|---|---|
| PVOC Water, Method 8020 | | | | |
| Benzene | BQL | <25 ## | NTF | ug/l |
| Ethylbenzene | BQL | <25 | NTF | ug/l |
| Methyl-t-butylether | BQL | <25 | NTF | ug/l |
| Toluene | BQL | <25 | NTF | ug/l |
| 1,2,4-Trimethylbenzene | BQL | <25 | NTF | ug/l |
| 1,3,5-Trimethylbenzene | BQL | <25 | NTF | ug/l |
| Total Xylenes | BQL | <25 | NTF | ug/l |
| TRPH, Water | 1500 | 35 | NTF | ppm |
| Total Organic Halogens | 1100 ug/l | 440 | 250 | mg/l |

## Elevated detection limit due to the presence of chlorinated target compounds

NTF = Not Tested For

BQL - Below Quantification Limit

Groundwater Well MW-9

| Test Description | No. 4 | No. 3 | No. 2 | No. 1 | Units |
|---|---|---|---|---|---|
| PVOC Water, Method 8020 | | | | | |
| Benzene | BQL | <1.0 | <1.0 | NTF | ug/l |
| Ethylbenzene | BQL | <1.0 | <1.0 | NTF | ug/l |
| Methyl-t-butylether | BQL | <1.0 | <1.0 | NTF | ug/l |
| Toluene | BQL | <1.0 | <1.0 | NTF | ug/l |
| 1,2,4-Trimethylbenzene | BQL | <1.0 | 2.2 | NTF | ug/l |
| 1,3,5-Trimethylbenzene | BQL | <1.0 | <1.0 | NTF | ug/l |
| Total Xylenes | BQL | <1.0 | <1.0 | NTF | ug/l |
| TRPH, Water | 0.88 | 2.4 | <1.0 | NTF | ppm |
| Total Organic Halogens | 21 ug/l | 5.0 | 64 | 38 | mg/l |

Groundwater Well MW-10

| Test Description | No. 4 | No. 3 | No. 2 | No. 1 | Units |
|---|---|---|---|---|---|
| PVOC Water, Method 8020 | | | | | |
| Benzene | BQL | <200 * | <50 * | NTF | ug/l |
| Ethylbenzene | BQL | <200 | 62 | NTF | ug/l |
| Methyl-t-butylether | BQL | <200 | <50 | NTF | ug/l |
| Toluene | BQL | <200 | <50 | NTF | ug/l |
| 1,2,4-Trimethylbenzene | BQL | 2900 | <50 | NTF | ug/l |
| 1,3,5-Trimethylbenzene | BQL | 1100 | 290 | NTF | ug/l |
| Total Xylenes | BQL | <200 | <50 | NTF | ug/l |
| TRPH, Water | 890 | 2500 | 1200 | NTF | ppm |
| Total Organic Halogens | 560 ug/l | 450 | 168 | 140 | mg/l |

* Elevated detection limit due to sample concentration

Groundwater Well MW-11

| Test Description | No. 4 | No. 3 | No. 2 | No. 1 | Units |
|---|---|---|---|---|---|
| PVOC Water, Method 8020 | | | | | |
| Benzene | BQL | <1.0 | <1.0 | 2.1 | ug/l |
| Ethylbenzene | BQL | <1.0 | <1.0 | <1.0 | ug/l |
| Methyl-t-butylether | BQL | 16 | 28 | 1.6 | ug/l |
| Toluene | BQL | <1.0 | <1.0 | 64 | ug/l |
| 1,2,4-Trimethylbenzene | BQL | <1.0 | <1.0 | <1.0 | ug/l |
| 1,3,5-Trimethylbenzene | BQL | <1.0 | <1.0 | <1.0 | ug/l |
| Total Xylenes | BQL | <1.0 | <1.0 | <1.0 | ug/l |
| TRPH, Water | 1.2 | 8.9 | <1.0 | NTF | ppm |
| Total Organic Halogens | 180 ug/l | 140 | 66.4 | 23.4 | mg/l |

Groundwater Well MW-12

| Test Description | No. 4 | No. 3 | No. 2 | No. 1 | Units |
|---|---|---|---|---|---|
| PVOC Water, Method 8020 | | | | | |
| Benzene | BQL | <1.0 | <1.0 | <1.0 | ug/l |
| Ethylbenzene | BQL | <1.0 | <1.0 | <1.0 | ug/l |
| Methyl-t-butylether | BQL | <1.0 | <1.0 | 37 | ug/l |
| Toluene | BQL | <1.0 | <1.0 | <1.0 | ug/l |
| 1,2,4-Trimethylbenzene | BQL | <1.0 | <1.0 | <1.0 | ug/l |
| 1,3,5-Trimethylbenzene | BQL | <1.0 | <1.0 | <1.0 | ug/l |
| Total Xylenes | BQL | <1.0 | <1.0 | <1.0 | ug/l |
| TRPH, Water | 72 mg/l | 160 | 1.1 | NTF | ppm |
| Total Organic Halogens | 580 ug/l | 76 mg/l | <0.05 ug/l | 92.8 mg/l | |

Please see Appendix III for laboratory reports.

DISCUSSION

This latest sampling round indicates a modest reduction in the Total Organic Halogen concentrations at each monitoring well sampled. TRPH concentrations also decreased at each well sampled, except for MW-1. All Method 8020 Water compounds were below quantification limits, no well showing a detect for these Method 8020 Water compounds.

All eight (8) Monitoring Wells were surveyed and groundwater depths were established with MW-2 used as a benchmark. Initial analysis of the depth to groundwater indicates a groundwater flow north north east. Please see Appendix IV for survey and depth to groundwater information.

During late August 1992, Twin Disc, Inc. began continuously pumping the broach pit sump. To date, approximately 1200 gallons of oil/water/solvent have been pumped from the pit and disposed of. Disposal of this material has been through OSI or Clean Harbors. A sample of this material was submitted to Precision Analytical Labs for profiling purposes. Precision Analytical Labs Order # 92-09-040 provides the results of this analysis. (Please see Appendix V).

## CONCLUSIONS/RECOMMENDATIONS

It is recommended that each of these five groundwater monitoring wells be resampled and reanalyzed for Total Organic Hydrocarbon (TOX), Total Recoverable Petroleum Hydrocarbons (TRPH), and PVOC Water, Method 8020 to determine if seasonal fluctuations are present. Resampling of these five wells will provide confirmation of detects and confirm the initial pumping remediation strategy as a means of reducing concentration levels of contaminates.

Immediate removal activities to recover free product have been initiated. Shallow well pneumatic product recovery pumps were installed during late December, 1992 and have been operating since the first week of January, 1993 at MW-2, MW-6, and MW-7. This activity will provide for recovery of the floating oil phase and provide a barrier for further product migration. The initial objective of this immediate removal will be to pump the oil immediately adjacent to the broach pit and reduce product contribution to the contaminate plume. Any oil recovered through this pumping activity will be properly classified for disposal offsite. Removal of the floating layer will provide a source reduction for further contamination. Oil pumped from the wells will be collected for off site disposal, either through Clean Harbors or OSI.

Additional borings and groundwater monitoring wells will be necessary to further define the degree and extent of contamination. These wells will be installed south of MW-11, east of MW-6, and west of MW-10. A well north of MW-12 would be required if a subsequent sampling round indicates contamination at MW-12. All newly installed wells will be located at least 50 feet beyond the presently defined zone of contamination. New well locations will be sited to intersect with the suspected plume of contamination.

## LIST OF APPENDICES

APPENDIX I: Well Location

APPENDIX II: Sample Chain of Custody

APPENDIX III: Laboratory Reports

APPENDIX IV: Well Survey

APPENDIX V: Waste Profile

# APPENDIX I: Well Location

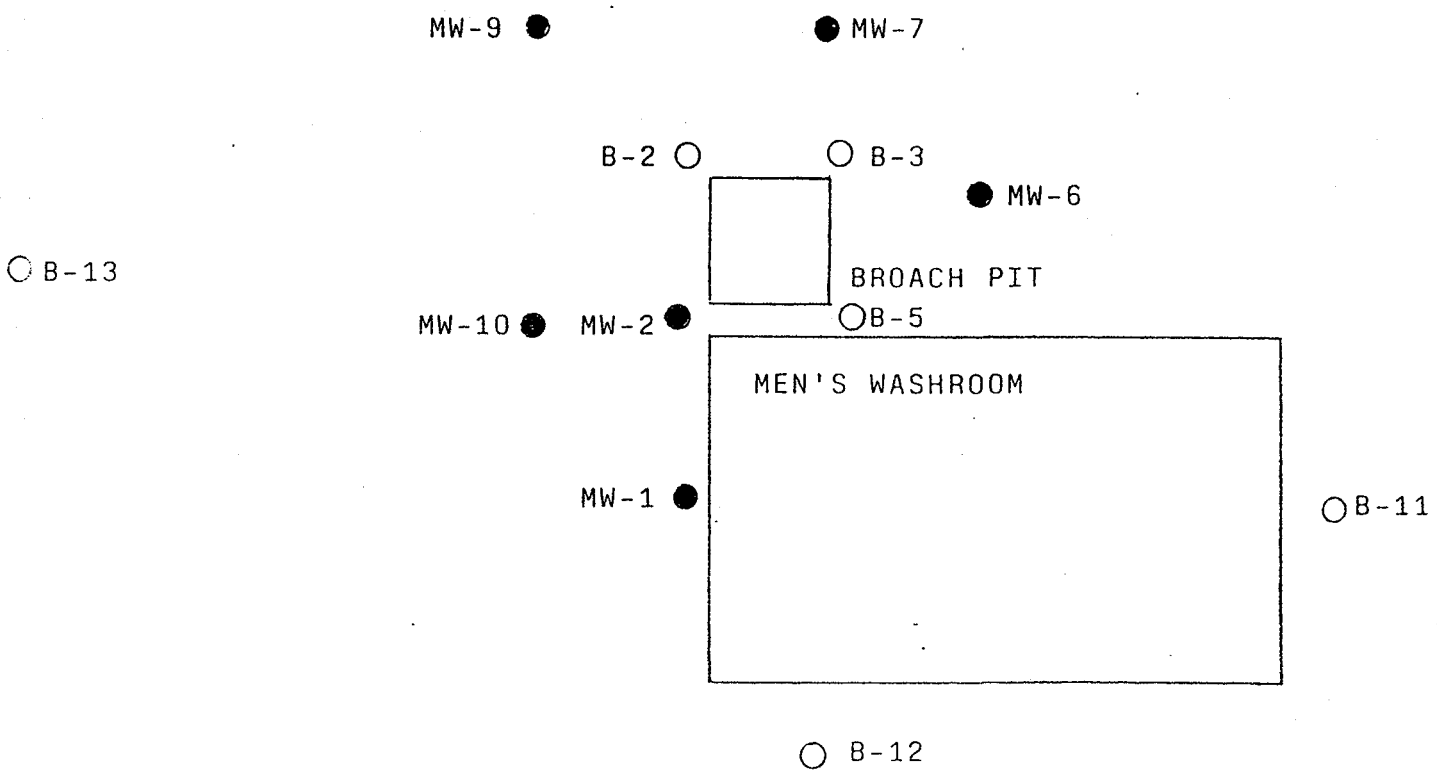


● = Monitoring Well

○ = Boring

TWIN DISC, INC.

| | | |
|---|---|---|
| SCALE: NTS | APPROVED BY | DRAWN BY |
| DATE: 5/28/92 | | |

Location of borings and monitoring wells installed 12/12 through 12/14/90

DRAWING NUMBER

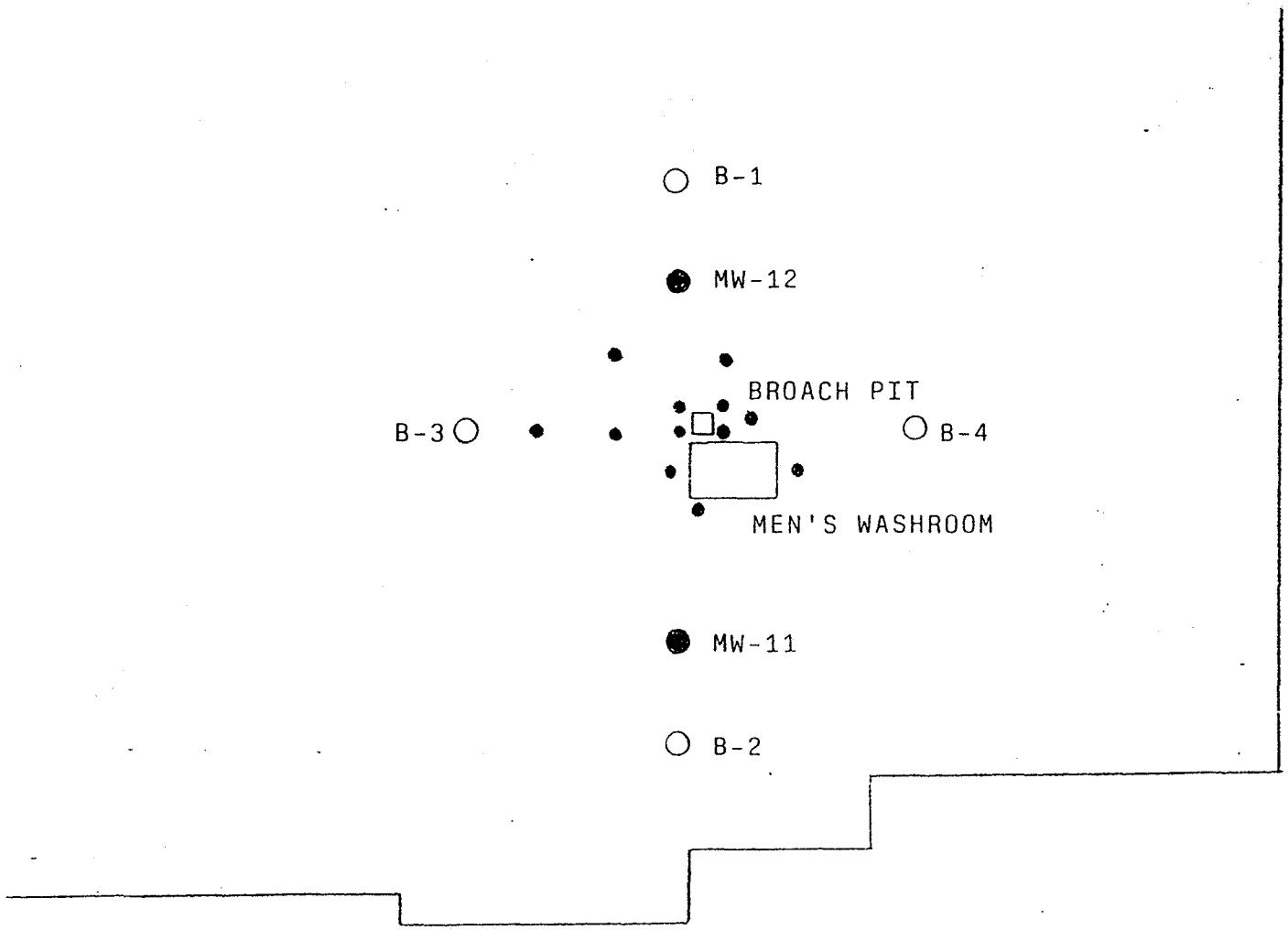


● = Existing Boring or Monitoring Well
= Monitoring Well
○ = Boring

TWIN DISC, INC.

| | | |
|---|---|---|
| SCALE: NTS | APPROVED BY | DRAWN BY |
| DATE: 5/28/92 | | EE Fagnant |

Location of borings and monitoring wells installed 7/31 through 8/2/91

PLANT 3

DRAWING NUMBER

APPENDIX II: Sample Chain of Custody

Precision Analytical Laboratory
205 W. Galena
Milwaukee, WI 53212

**Phone: (414) 272-5222**
**Fax: (414) 272-6949**

CLIENT INFORMATION

Project Manager: E C RAYMOND
Company: ENVIRONMENTAL AUDITS, INC.
Address: 1100 COMMERCE DR., SUITE 112
RACINE WI 53406
Phone: (414) 886 6195 Fax: (414) 886 6196
Project:
Quote/Reference:
Reports to be sent to: EC RAYMOND

# Chain of Custody

**Page 1 of 1** NO 7590

SPECIAL INSTRUCTIONS:

Property Owner:
Property Address:
Telephone Number:

Del'v: Hand Comm.
Ship Cont. OK? Y N N/A
Rec'd Refrig.? Y N N/A
Seals OK? Y N N/A
Samples leaking? Y N N/A
Comments:

Temperature
Blank: _____ C

**SAMPLE HANDLING**
___ Nonhazardous ___ Reactive
___ Flammable ___ Work in Hood
___ Skin Irritant ___ Wear Gloves
___ Highly Toxic ___ Infectious
___ Other (specify) _____

**Turnaround Time**
X Normal
___ Rush ** (Please refer to Quote/Reference Number)
Date Needed: _____
** WAS LAB NOTIFIED (Y/N) ____

FILTERED (YES/NO): N
PRESERVED (CODE): A
REFRIGERATED (YES/NO): Y

Preservation Code
(A-None) B-HN03
C-$H_2SO_4$ D-NAOH
E-HCL F-_____
M-MEOH

REMARKS:

| LAB USE ONLY | DATE | TIME | COMP | GRAB | TOTAL NUMBER OF CONTAINERS | MATRIX: Surface Water(1), Ground Water(2) Soil(3), Solid/Liquid Waste(4/5), Other(6) | FIELD ID | LOCATION / DESCRIPTION | ANALYSIS: TPH (Fill in spaces with bottles per test) | | | | | | |
|---|---|---|---|---|---|---|---|---|---|---|---|---|---|---|---|
| 92121721 | 12/16/92 | 1:30 PM | | X | 1 | 2 | BPMW-12 | | X | | | | | | QC Inv |
| | | | | | | | | | | | | | | | |
| | | | | | | | | | | | | | | | |
| | | | | | | | | | | | | | | | |
| | | | | | | | | | | | | | | | |
| | | | | | | | | | | | | | | | |
| | | | | | | | | | | | | | | | |
| | | | | | | | | | | | | | | | |
| | | | | | | | | | | | | | | | |
| | | | | | | | | | | | | | | | |

Disposition of unused portion of sample
Laboratory Should:
___ Dispose *
___ Return
___ Retain for ___ days
___ Other

* Disposal charges listed in fee schedule

| Relinquished By (Signature) | Date /Time | Received By (Signature) |
|---|---|---|
| [signature] | 12/17/92 2:25 | [signature] |
| Relinquished By (Signature) | Date / Time | Received By (Signature) |
| | | |
| Relinquished By (Signature) | Date / Time | Received For Laboratory By: (Signature) |
| | | |

White - Canary - Pink Gold - Cu

Precision Analytical Laboratory
205 W. Galena
Milwaukee, WI 53212

Phone: (414) 272-5222
Fax: (414) 272-6949

Project Manager: [illegible]
Company: [illegible] ENTERPRISES INC
Address: 1100 COMMERCE [illegible], SUITE 112
RACINE WI 53406
Phone: (414) 886 6195 Fax: (414) 886 6196
Project:
Quote/Reference:
Reports to be sent to: E.C. PAYMOND

# Chain of Custody

Page 1 of 1 No. 7590

SPECIAL INSTRUCTIONS:
TO: BETH KLEIN

Property Owner:
Property Address:
Telephone Number:

Del'v: Hand Comm.
Ship Cont. OK? Y N N/A
Rec'd Refrig.? Y N N/A
Seals OK? Y N N/A
Samples leaking? Y N N/A
Comments:

Temperature
Blank: ____ C

SAMPLE HANDLING
___ Nonhazardous ___ Reactive
___ Flammable ___ Work in Hood
___ Skin Irritant ___ Wear Gloves
___ Highly Toxic ___ Infectious
___ Other (specify) ____

Turnaround Time
X Normal
___ Rush ** (Please refer to Quote/Reference Number)
Date Needed: ____
** WAS LAB NOTIFIED (Y/N) ____

FILTERED (YES/N)
PRESERVED (CO)
REFRIGERATED (YES/N)

Preservation Code
A-None B-HNO3
C-H2SO4 D-NAOH
E-HCL F-____
M-MEOH

REMARKS:

| LAB USE ONLY | DATE | TIME | COMP | GRAB | TOTAL NUMBER OF CONTAINERS | MATRIX: Surface Water(1), Ground Water(2) Soil(3), Solid/Liquid Waste(4/5), Other(6) | FIELD ID | LOCATION / DESCRIPTION | ANALYSIS: TPH | Fill in spaces with bottles per test |
|---|---|---|---|---|---|---|---|---|---|---|
| | 11/17/92 | 1:30 PM | | X | 1 | 2 | BPMW-12 | | X | |

PLEASE RUN TRPH
NOT TPH
THANK YOU
Ed Raymond

Disposition of unused portion of sample
Laboratory Should:
___ Dispose *
___ Return
___ Retain for ____ days
___ Other

* Disposal charges listed in fee schedule

| Relinquished By (Signature) | Date /Time | Received By (Signature) |
|---|---|---|
| Ed Raymond | 12/17/92 2:25 | Sarah Porter |
| Relinquished By (Signature) | Date / Time | Received By (Signature) |
| Relinquished By (Signature) | Date / Time | Received For Laboratory By (Signature) |

Precision Analytical Laboratory
205 W. Galena
Milwaukee, WI 53212

**Phone:** (414) 272-5222
**Fax:** (414) 272-6949

CLIENT INFORMATION

Project Manager: EE RAYMOND
Company: ENVIRONMENTAL AUDITS
Address: 1100 COMMERCE DR. SUITE 112
RACINE WI 53406
Phone: (414) 886 6195 Fax: (414) 886 6196
Project:
Quote/Reference:
Reports to be sent to:

# Chain of Custody

Page 1 of 1 № 7591

SPECIAL INSTRUCTIONS:

Property Owner:
Property Address:
Telephone Number:

Del'v: Hand Comm.
Ship Cont. OK? Y N N/A
Rec'd Refrig.? Y N N/A
Seals OK? Y N N/A
Samples leaking? Y N N/A
Comments:

Temperature Blank: ice C

**SAMPLE HANDLING**

___ Nonhazardous ___ Reactive
___ Flammable ___ Work in Hood
___ Skin Irritant ___ Wear Gloves
___ Highly Toxic ___ Infectious
___ Other (specify) ___

**Turnaround Time**

X Normal
___ Rush ** (Please refer to Quote/Reference Number)
Date Needed: ___
** WAS LAB NOTIFIED (Y/N) ___

Preservation Code
A-None B-HN03
C-H2SO4 D-NAOH
E-HCL F- ___
M-MEOH

REMARKS:

| LAB USE ONLY | DATE | TIME | COMP | GRAB | TOTAL NUMBER OF CONTAINERS | MATRIX: Surface Water(1), Ground Water(2) Soil(3), Solid/Liquid Waste(4/5), Other(6) | FIELD ID | LOCATION / DESCRIPTION | TRPH | TOX | PVOC WATER 8020 | | | | FILTERED (YES/NO) | PRESERVED (CODE) | REFRIGERATED (YES/NO) |
|---|---|---|---|---|---|---|---|---|---|---|---|---|---|---|---|---|---|
| | | | | | | | | | | | | | | | N | N | N |
| | | | | | | | | | | | | | | | N | B | E |
| | | | | | | | | | | | | | | | Y | Y | Y |
| | 12/9 | 2:00 | | X | 3 | 2 | BPMW-1 | | 1 | 1 | 1 | | | | | | |
| | 12/9 | ↓ | | X | 3 | 2 | BPMW-9 | | 1 | 1 | 1 | | | | | | |
| | 12/9 | | | X | 3 | 2 | BPMW-10 | | 1 | 1 | 1 | | | | | | |
| | 12/9 | | | X | 3 | 2 | BPMW-11 | | 1 | 1 | 1 | | | | | | |
| | 12/9 | | | X | 2 | 2 | BPMW-12 | | | 1 | 1 | | | | | | |

Fill in spaces with bottles per test

Disposition of unused portion of sample
Laboratory Should:
___ Dispose *
___ Return
___ Retain for ___ days
___ Other

* Disposal charges listed in fee schedule

| Relinquished By (Signature) | Date /Time | Received By (Signature) |
|---|---|---|
| EE Raymond | 12 11 92 1030 AM | Richard [illegible] |
| Relinquished By (Signature) | Date / Time | Received By (Signature) |
| | | |
| Relinquished By (Signature) | Date / Time | Received For Laboratory By: (Signature) |
| | | |

# APPENDIX III: Laboratory Reports

# PRECISION ANALYTICAL LABORATORY

205 WEST GALENA
MILWAUKEE, WI 53212
(414) 272-5222

02/05/93

Analytical Report

Attn: E. E. Raymond
Client: Environmental Audits, Inc.
1100 Commerce Drive
Suite 112
Racine, WI 53406

WORK ID: Water Samples

Date Received: 12/11/92
Date Reported: 02/05/93

PAL ORDER #: 9212124

| SAMPLE DESCRIPTION | LAB ID | DATE COLLECTED |
|---|---|---|
| BPMW-1 | 01A | 12/09/92 |
| BPMW-9 | 02A | 12/09/92 |
| BPMW-10 | 03A | 12/09/92 |
| BPMW-11 | 04A | 12/09/92 |
| BPMW-12 | 05A | 12/09/92 |

Laboratory ID Number (Wisconsin DNR): 241369260

**Certified By**
**Jeff Bushner**

# PRECISION ANALYTICAL LABORATORY



CLIENT: **Environmental Audits, Inc.**

| Test | Result | Limit | Units | Analyzed | Extracted | BY | Method(SW846) |
|---|---|---|---|---|---|---|---|
| **Sample ID: BPMW-1** | | Lab ID: | 9212124-01A | Collected: 12/09/92 | | | |
| 8020 Water | | | | | | | 8020 |
| Benzene | BQL | 25 | ug/l | 12/22/92 | | JAH | |
| Chlorobenzene | BQL | 25 | ug/l | 12/22/92 | | JAH | |
| 1,4-Dichlorobenzene | BQL | 50 | ug/l | 12/22/92 | | JAH | |
| 1,3-Dichlorobenzene | BQL | 50 | ug/l | 12/22/92 | | JAH | |
| 1,2-Dichlorobenzene | BQL | 50 | ug/l | 12/22/92 | | JAH | |
| Ethyl Benzene | BQL | 25 | ug/l | 12/22/92 | | JAH | |
| Toluene | BQL | 25 | ug/l | 12/22/92 | | JAH | |
| Xylenes | BQL | 25 | ug/l | 12/22/92 | | JAH | |
| Total Organic Halogens | 1100 | | ug/l | 01/13/93 | | REL | |
| TRPH, Water | 1500 | 100 | mg/l | 12/16/92 | 12/15/92 | JJB | Wis Mod 9073 |
| **Sample ID: BPMW-9** | | Lab ID: | 9212124-02A | Collected: 12/09/92 | | | |
| 8020 Water | | | | | | | 8020 |
| Benzene | BQL | 1.0 | ug/l | 12/21/92 | | JAH | |
| Chlorobenzene | BQL | 1.0 | ug/l | 12/21/92 | | JAH | |
| 1,4-Dichlorobenzene | BQL | 2.0 | ug/l | 12/21/92 | | JAH | |
| 1,3-Dichlorobenzene | BQL | 2.0 | ug/l | 12/21/92 | | JAH | |
| 1,2-Dichlorobenzene | BQL | 2.0 | ug/l | 12/21/92 | | JAH | |
| Ethyl Benzene | BQL | 1.0 | ug/l | 12/21/92 | | JAH | |
| Toluene | BQL | 1.0 | ug/l | 12/21/92 | | JAH | |
| Xylenes | BQL | 1.0 | ug/l | 12/21/92 | | JAH | |
| Total Organic Halogens | 21 | | ug/l | 01/13/93 | | REL | |
| TRPH, Water | 0.88 | 0.10 | mg/l | 12/16/92 | 12/15/92 | JJB | Wis Mod 9073 |
| **Sample ID: BPMW-10** | | Lab ID: | 9212124-03A | Collected: 12/09/92 | | | |
| 8020 Water | | | | | | | 8020 |
| Benzene | BQL | 1.0 # | ug/l | 12/21/92 | | JAH | |
| Chlorobenzene | BQL | 1.0 # | ug/l | 12/21/92 | | JAH | |
| 1,4-Dichlorobenzene | BQL | 2.0 # | ug/l | 12/21/92 | | JAH | |
| 1,3-Dichlorobenzene | BQL | 2.0 # | ug/l | 12/21/92 | | JAH | |
| 1,2-Dichlorobenzene | BQL | 2.0 # | ug/l | 12/21/92 | | JAH | |
| Ethyl Benzene | BQL | 1.0 # | ug/l | 12/21/92 | | JAH | |
| Toluene | BQL | 1.0 # | ug/l | 12/21/92 | | JAH | |
| Xylenes | BQL | 1.0 # | ug/l | 12/21/92 | | JAH | |
| Total Organic Halogens | 560 | | ug/l | 01/13/93 | | REL | |
| TRPH, Water | 890 | 100 | mg/l | 12/16/92 | 12/15/92 | JJB | Wis Mod 9073 |
| **Sample ID: BPMW-11** | | Lab ID: | 9212124-04A | Collected: 12/09/92 | | | |
| 8020 Water | | | | | | | 8020 |

BQL - Below Quantification Limit

# PRECISION ANALYTICAL LABORATORY



CLIENT:**Environmental Audits, Inc.**

| Test | Result | Limit | Units | Analyzed | Extracted | BY | Method(SW846) |
|---|---|---|---|---|---|---|---|
| 8020 Water | | | | | | | 8020 |
| Benzene | BQL | 1.0 | ug/l | 12/21/92 | | JAH | |
| Chlorobenzene | BQL | 1.0 | ug/l | 12/21/92 | | JAH | |
| 1,4-Dichlorobenzene | BQL | 2.0 | ug/l | 12/21/92 | | JAH | |
| 1,3-Dichlorobenzene | BQL | 2.0 | ug/l | 12/21/92 | | JAH | |
| 1,2-Dichlorobenzene | BQL | 2.0 | ug/l | 12/21/92 | | JAH | |
| Ethyl Benzene | BQL | 1.0 | ug/l | 12/21/92 | | JAH | |
| Toluene | BQL | 1.0 | ug/l | 12/21/92 | | JAH | |
| Xylenes | BQL | 1.0 | ug/l | 12/21/92 | | JAH | |
| Total Organic Halogens | 180 | | ug/l | 01/13/93 | | REL | |
| TRPH, Water | 1.2 | 0.10 | mg/l | 12/16/92 | 12/15/92 | JJB | Wis Mod 9073 |

**Sample ID: BPMW-12** Lab ID: 9212124-05A Collected: 12/09/92

| | | | | | | | |
|---|---|---|---|---|---|---|---|
| 8020 Water | | | | | | | 8020 |
| Benzene | BQL | 1.0 | ug/l | 12/26/92 | | JAH | |
| Chlorobenzene | BQL | 1.0 | ug/l | 12/26/92 | | JAH | |
| 1,4-Dichlorobenzene | BQL | 2.0 | ug/l | 12/26/92 | | JAH | |
| 1,3-Dichlorobenzene | BQL | 2.0 | ug/l | 12/26/92 | | JAH | |
| 1,2-Dichlorobenzene | BQL | 2.0 | ug/l | 12/26/92 | | JAH | |
| Ethyl Benzene | BQL | 1.0 | ug/l | 12/26/92 | | JAH | |
| Toluene | BQL | 1.0 | ug/l | 12/26/92 | | JAH | |
| Xylenes | BQL | 1.0 | ug/l | 12/26/92 | | JAH | |
| Total Organic Halogens | 580 | | ug/l | 01/13/93 | | REL | |

BQL - Below Quantification Limit

# PRECISION ANALYTICAL LABORATORY

Report Comments

02/05/93

CLIENT: Environmental Audits, Inc.

PAL Order #: 9212124

All analysis as per approved method found in one or more of the following:
Standard Methods for Evaluation of Water and Wastewater, 17th Edition
Methods for Chemical Analysis for Water and Wastes, Revised March 1983, EPA 600/4-79-020
Test Methods for Evaluating Solid Waste, Physical/Chemical Methods, 3rd Edition 1986 EPA SW846

---

Analysis performed or certified by Precision Analytical Laboratory

Sample was covered air tight in approved container, shipped in cooler from the source to our lab, temperature upon arrival was 4 degrees C.

The samples ordered for TRPH were analyzed by Modified EPA Method 9073.

The samples ordered for TRPH were not preserved prior to arrival at the lab.

# Elevated detection limit due to severe matrix interference.

The samples ordered for 8020 were analyzed according to Method 8020 ( SW 846 Test Methods for Evaluating Solid Waste - Physical/ Chemical Methods )

Sample # 9212124-04 indicated approximate concentrations of the following compounds:

cis-1,2-dichloroethene = 69 ug/l
trans-1,2-dichloroethene = 25 ug/l
trichloroethene = 12 ug/l

Sample # 9212124-03 indicated approximate concentrations of the following compounds:

cis-1,2-dichloroethene = 240 ug/l
naphthalene = 4100 ug/l
1,2,4-trimethylbenzene = 1100 ug/l

# PRECISION ANALYTICAL LABORATORY

Report Comments

02/02/93

CLIENT: Environmental Audits, Inc.

PAL Order #: 9301179

All analysis as per approved method found in one or more of the following:
Standard Methods for Evaluation of Water and Wastewater, 17th Edition
Methods for Chemical Analysis for Water and Wastes, Revised March 1983, EPA 600/4-79-020
Test Methods for Evaluating Solid Waste, Physical/Chemical Methods, 3rd Edition 1986 EPA SW846

---

Analysis performed or certified by Precision Analytical Laboratory

# PRECISION ANALYTICAL LABORATORY

205 WEST GALENA
MILWAUKEE, WI 53212
(414) 272-5222

Analytical Report

ATTN: E. E. Raymond
CLIENT: Environmental Audits, Inc.
1100 Commerce Drive
Suite 112
Racine, WI 53406

WORK ID: BPMW-12

RECEIVED DATE: 12/17/92
REPORTED DATE: 01/05/93

PAL ORDER #: 9212192

| SAMPLE DESCRIPTION | LAB ID | DATE COLLECTED |
|---|---|---|
| BPMW-12 | 01A | 12/16/92 |

Laboratory ID Number (Wisconsin DNR): 241369260

**Certified By**
**Jeff Bushner**

# PRECISION ANALYTICAL LABORATORY



CLIENT: **Environmental Audits, Inc.**

| Test | Result | Quant.Lmt. | Units | Analyzed | Extracted | BY | Method(SW846) |
|---|---|---|---|---|---|---|---|
| Sample ID: **BPMW-12** | | | Lab ID: | 9212192-01A | Collected: 12/16/92 | | |
| TRPH, Water | 72 | 2.5 | mg/l | 01/04/93 | 12/23/92 | JJB | Wis Mod 9073 |

BQL - Below Quantification Limit

# PRECISION ANALYTICAL LABORATORY

Report Comments

01/05/93

CLIENT: **Environmental Audits, Inc.**

PAL Order #: 9212192

All analysis as per approved method found in one or more of the following:
Standard Methods for the Evaluation of Water and Wastewater, 16th Edition.
Methods for Chemical Analysis for Water and Wastes, Revised March 1983, EPA 600/4-79-020
Test Methods for Evaluating Solid Waste, Physical/Chemical Methods, 3rd Edition 1986 EPA SW846

---

Analysis performed or certified by Precision Analytical Laboratory

Sample for TRPH arrived unpreserved.

Sample was covered air tight in approved container, shipped in cooler from the source to our lab, temperature upon arrival was 4 degrees C.

The samples ordered for TRPH were analyzed by Modified EPA Method 9073.

# APPENDIX IV: Well Survey

NM
&B

Nielsen Madsen & Barber, S.C.
Consulting Civil Engineers

*Established 1954*

1339 Washington Avenue
Racine, Wisconsin 53403
Racine, 414/634-5588
Kenosha 414/552-7902
Fax 414/634-5024

Walter R. Madsen, P.E., R.L.S.
James D. Barber, P.E.
Mark R. Madsen, P.E.
James E. Robinson, R.L.S.
Michael A. Moe, R.L.S.

John H. Nielsen, P.E., R.L.S.
Consultant

**REPORT FOR ENVIRONMENTAL AUDITS, INC.**

**Twin Disc, Inc., 4600 21st Street, Racine, Wisconsin**

**File 92.210**

According to instructions outlined in Edwin E. Raymond's letter of May 20, 1992, the relative elevation differences between 8 groundwater monitoring wells located in the Twin Disc industrial facility at 4600 21st Street, Racine, Wisconsin, were determined.

On June 30, 1992 our survey crew performed the required work. They established Monitoring Well No. 2, as elevation 0.00 (see attached drawing) and determined the other 7 monitoring well elevations in relationship to Monitoring Well No. 2. The relative elevations are shown in the table on the attached drawing. They vary from -0.06 ft. (3/4 inch) at Monitoring Well No. 11, to -0.39 ft. (4-3/4 inch) at Monitoring Well No. 12, relative to the benchmark well (No. 2).

James D. Barber

James D. Barber, P.E.

WISCONSIN
JAMES D.
BARBER
E-11713
RACINE,
WIS.
PROFESSIONAL ENGINEER

## TOP OF PVC ELEV.

| | | | |
|---|---|---|---|
| MW-1 = | -0.28 ft. | MW-9 = | -0.33 ft. |
| MW-2 = | 0.00 ft. | MW-10 = | -0.31 ft. |
| MW-6 = | -0.11 ft. | MW-11 = | -0.06 ft. |
| MW-7 = | -0.10 ft. | MW-12 = | -0.39 ft. |

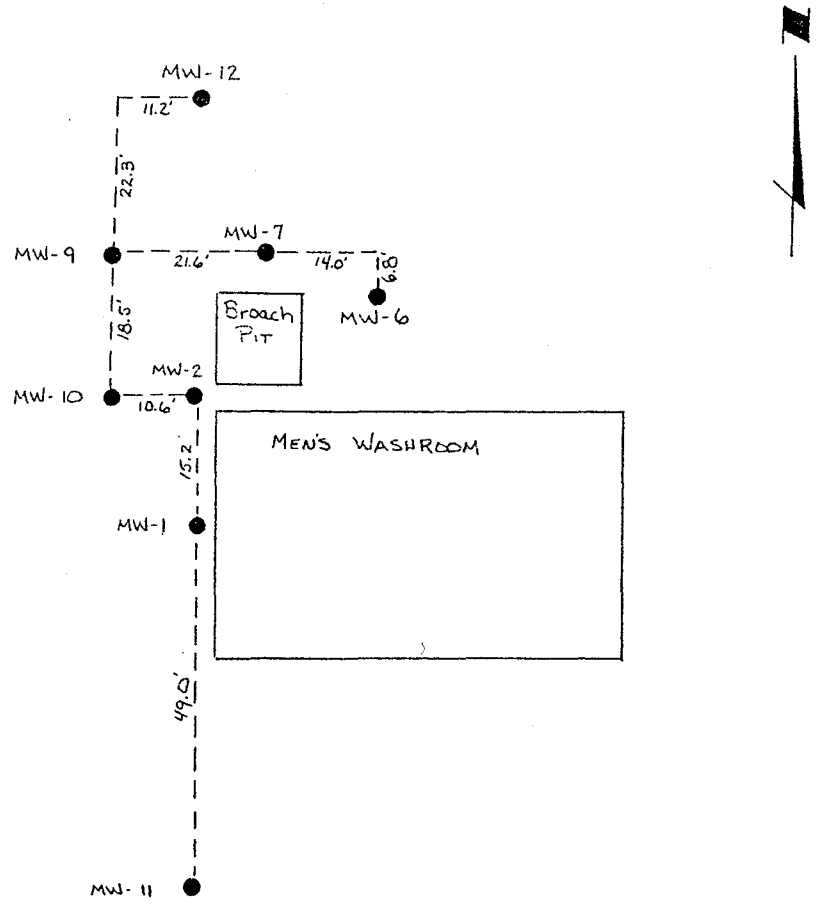


NM &B
Nielsen Madsen & Barber
Consulting Civil Engineers
1339 Washington Avenue Racine, Wisconsin 53403
(414) 634-5588/552-7902

TWIN DISC
21ST & OHIO

92.210

The depth to the surface of the groundwater has been determined for the eight (8) groundwater monitoring wells surrounding the broach pit. The depths are as follows:

| | Depth to GW Surface | | Depth of Well |
|---|---|---|---|
| | 12/9/92 | 10/30/92 | |
| MW-1 | 11' 4.7" | 11' 10" | 15.0' |
| MW-2 | 13' 1.9" | 13' 2.8" | 15.0' |
| MW-6 | 13' 9" | 13' 10.7" | 15.0' |
| MW-7 | 12' 10" | 11' 10.9" | 15.0' |
| MW-9 | 9' 1.8" | 9' 0.56" | 15.0' |
| MW-10 | 12' 3.1" | 13' 4.52" | 15.0' |
| MW-11 | 14' 0.1" | 11' 7" | 15.8' |
| MW-12 | 14' 1.4" | 14' 6.8" | 19.0' |

# APPENDIX V: Waste Profile

**Precision Analytical Lab, Inc**
**205 West Galena**
**Milwaukee, WI 53212**

**Phone: (414) 272-5222**

Environmental Audits, Inc.
1100 Commerce Drive
Suite 112
Racine, WI 53406
Attn: Ed Raymond
Invoice Number:

Order #: 92-09-040
Date: 09/15/92 09:26
Work ID: BP-SUMP
Date Received: 09/02/92
Date Completed: 09/15/92
Client Code: ENVIRO_AUDT

SAMPLE IDENTIFICATION

| Sample Number | Sample Description | Sample Number | Sample Description |
|---|---|---|---|
| 01 | BP-SUMP | | |

Laboratory ID Number (Wisconsin DNR): 241369260

Certified By
Jeff Bushner,Linda Woodie

**Sample: 01A BP-SUMP** **Collected: 09/02/92**

| Test Description | Result | Limit | Units | Analyzed | By |
|---|---|---|---|---|---|
| TCLP (Arsenic) | < 0.005 | | mg/l | 09/11/92 | LJW |
| TCLP (Barium) | 0.70 | | mg/l | 09/10/92 | LJW |
| TCLP (Cadmium) | < 0.02 | | mg/l | 09/10/92 | LJW |
| TCLP (Chromium) | < 0.02 | | mg/l | 09/10/92 | LJW |
| TCLP (Lead) | < 0.20 | | mg/l | 09/10/92 | LJW |
| TCLP (Mercury) | <0.0008 | | mg/l | 09/14/92 | MHM |
| TCLP (Selenium) | < 0.010 | | mg/l | 09/10/92 | LJW |
| TCLP (Silver) | < 0.05 | | mg/l | 09/10/92 | LJW |
| TCLP Inorganic Extraction | - | | - | 09/03/92 | MJH |

**Sample: 01B BP-SUMP** **Collected: 09/02/92**
**Job: TCLP_O TCLP Organic**

| Test Description | Result | Limit | Units | Analyzed | By |
|---|---|---|---|---|---|
| 8240 TCLP | | | | | |
| Benzene | ## < 5000 | 500 | ug/l | 09/14/92 | JJB |
| Methyl Ethyl Ketone | < 10000 | 200000 | ug/l | 09/14/92 | JJB |
| Carbon tetrachloride | < 5000 | 500 | ug/l | 09/14/92 | JJB |
| Chlorobenzene | < 5000 | 100000 | ug/l | 09/14/92 | JJB |
| Chloroform | < 5000 | 6000 | ug/l | 09/14/92 | JJB |
| 1,2-Dichloroethane | < 5000 | 500 | ug/l | 09/14/92 | JJB |
| 1,4-Dichlorbenzene | < 10000 | 7500 | ug/l | 09/14/92 | JJB |
| 1,1-Dichloroethene | < 5000 | 700 | ug/l | 09/14/92 | JJB |
| Tetrachloroethene | < 5000 | 700 | ug/l | 09/14/92 | JJB |
| Trichloroethene | < 5000 | 500 | ug/l | 09/14/92 | JJB |
| Vinyl Chloride | < 5000 | 200 | ug/l | 09/14/92 | JJB |
| 8270 TCLP | | | | | |
| 2,4-Dinitrotoluene | < 100 | 130 | ug/l | 09/09/92 | JJB |
| Hexachlorobenzene | < 100 | 130 | ug/l | 09/09/92 | JJB |
| Hexachloro-1,3-butadiene | < 100 | 500 | ug/l | 09/09/92 | JJB |
| Hexachloroethane | < 100 | 3000 | ug/l | 09/09/92 | JJB |
| Cresol (Total) | < 100 | 200000 | ug/l | 09/09/92 | JJB |
| Nitrobenzene | < 100 | 2000 | ug/l | 09/09/92 | JJB |
| Pentachlorophenol | < 500 | 100000 | ug/l | 09/09/92 | JJB |
| 2,4,5-Trichlorophenol | < 100 | 400000 | ug/l | 09/09/92 | JJB |
| 2,4,6-Trichlorophenol | < 100 | 2000 | ug/l | 09/09/92 | JJB |
| Pyridine | < 100 | 5000 | ug/l | 09/09/92 | JJB |
| Organic Extraction | - | | - | 09/09/92 | PTH |
| TCLP Organic Extraction | - | | - | 09/03/92 | MJH |
| TCLP ZH Extraction | - | | - | 09/08/92 | BIK |

**Sample: 01C BP-SUMP** **Collected: 09/02/92**

| Test Description | Result | Limit | Units | Analyzed | By |
|---|---|---|---|---|---|
| % Water | 10 | | % | 09/14/92 | MHM |
| Cyanide, Reactive | <10 | | ppm | 09/04/92 | BIK |
| Flash Point, Closed Cup | >210 | | degrees F | 09/04/92 | MJH |

**Precision Analytical Lab, Inc**

TEST RESULTS BY SAMPLE



| Test Description | Result | Limit | Units | Analyzed | By |
|---|---|---|---|---|---|
| PCB, Waste | | | | | |
| Aroclor-1016 | < 1800 | | ug/kg | 09/10/92 | DLK |
| Aroclor-1221 | < 3700 | | ug/kg | 09/10/92 | DLK |
| Aroclor-1232 | < 1800 | | ug/kg | 09/10/92 | DLK |
| Aroclor-1242 | < 1800 | | ug/kg | 09/10/92 | DLK |
| Aroclor-1248 | < 1800 | | ug/kg | 09/10/92 | DLK |
| Aroclor-1254 | < 1800 | | ug/kg | 09/10/92 | DLK |
| Aroclor-1260 | < 1800 | | ug/kg | 09/10/92 | DLK |
| Sulfide, Reactive | < 2 | | ppm | 09/04/92 | BIK |
| pH | 7.2 | | units | 09/04/92 | BIK |

REPORT COMMENTS

# Elevated detection limit due to sample concentration.

## Elevated detection limit due to matrix interference.

The samples ordered for PCB were analyzed according to Method 8080 ( SW 846 Test Methods for Evaluating Solid Waste - Physical/ Chemical Methods )

Sample was covered air tight in approved container, shipped in cooler from the source to our lab, temperature upon arrival was 4 degrees C.

The samples ordered for 8240 were analyzed according to Method 8240 ( SW 846 Test Methods for Evaluating Solid Waste - Physical/ Chemical Methods )

The samples ordered for 8270 were analyzed according to Method 8270 ( SW 846 Test Methods for Evaluating Solid Waste - Physical/ Chemical Methods )

All TCLP analyses are corrected to include bias.

All analysis as per approved methods found in one or more of the following:
Standard Methods for the Evaluation of Water and Wastewater, 16th Edition.
Methods for Chemical Analysis for Water and Wastes, Revised March 1983, EPA 600/4-79-020
Test Methods for Evaluating Solid Waste, Physical/Chemical Methods, 3rd Edition 1986 EPA SW846

---

Analysis performed or certified by Precision Analytical Labs

Precision Analytical Laboratory
205 W. Galena
Milwaukee, WI 53212

**Phone: (414) 272-5222**
**Fax: (414) 272-6949**

CLIENT INFORMATION

Project Manager: EE RAYMOND
Company: ENVIRONMENTAL AUDITS
Address: 1100 COMMERCE DR., SUITE 112
RACINE WI 53406
Phone: (414) 886 6195 Fax: (414) 886 6196
Project:
Quote/Reference:
Reports to be sent to:

# Chain of Custody

Page ____ of ____ No 5755

SPECIAL INSTRUCTIONS:

Property Owner:
Property Address:
Telephone Number:

Del'v: Hand Comm.
Ship Cont. OK? Y N N/A
Rec'd Refrig.? Y N N/A
Seals OK? Y N N/A
Samples leaking? Y N N/A
Comments:

Temperature
Blank: ____ C

**SAMPLE HANDLING**
___ Nonhazardous ___ Reactive
___ Flammable ___ Work in Hood
___ Skin Irritant ___ Wear Gloves
___ Highly Toxic ___ Infectious
___ Other (specify) ____

**Turnaround Time**
___ Normal
X Rush ** (Please refer to Quote/Reference Number)
Date Needed: RUSH
** WAS LAB NOTIFIED (Y/N) Y

ANALYSIS: N / A / N

FILTERED (YES/NO)
PRESERVED (CODE)
REFRIGERATED (YES/NO)

Preservation Code
A-None B-HN03
C-$H_2SO_4$ D-NAOH
E-HCL F- ____
M-MEOH

REMARKS:

| LAB USE ONLY | DATE | TIME | COMP | GRAB | TOTAL NUMBER OF CONTAINERS | MATRIX: Surface Water(1), Ground Water(2) Soil(3), Solid/Liquid Waste(4/5), Other(6) | FIELD ID | LOCATION / DESCRIPTION | Fill in spaces with bottles per test |
|---|---|---|---|---|---|---|---|---|---|
| 120740-1 | 9/2 | | | X | 4 | 2 | BP - SUMP | | SEE ATTACHED PARAMETER LIST |
| | | | | | | | | | |
| | | | | | | | | | |
| | | | | | | | | | |
| | | | | | | | | | |
| | | | | | | | | | |
| | | | | | | | | | |
| | | | | | | | | | |
| | | | | | | | | | |
| | | | | | | | | | |

Disposition of unused portion of sample
Laboratory Should:
___ Dispose * ___ Retain for ____ days
___ Return ___ Other

* schedule

| Relinquished By (Signature) | Date /Time | Received By (Signature) |
|---|---|---|
| EE Raymond | 9-2-92 1:23 | Richard Lukey |
| Relinquished By (Signature) | Date / Time | Received By (Signature) |
| | | |
| Relinquished By (Signature) | Date / Time | Received For Laboratory By: (Signature) |
| | | |

Pl Gold - Cu